Installation Manual

RedBaron Mini

Anticollision LED Light

AveoEngineering™

© Aveo Engineering Group, s.r.o.
www.aveoengineering.com

Table of Contents

1. RedBaron Mini 3
Main Features:..... 3
2. WIRING DIAGRAM..... 4
3. CONTROL & POWER INPUTs:..... 4
4. TECHNICAL SPECIFICATION..... 5
5. TECHNICAL DRAWING..... 6
6. WIRING CHART 7
7. TESTING THE FUNCTION OF THE AVEO REDBARON MINI ANTICOLLISION LIGHT BEFORE INSTALLATION 8
8. CARE AND CLEANING OF YOUR AVEO ENGINEERING AVIATION LIGHTS..... 9

1. RedBaron Mini

The RedBaron Mini™ is a cousin to the RedBaronXP™, the world's smallest and brightest total coverage LED anticollision light. The new RedBaron Mini™ resulted from requests by high-performance racing aircraft, super lightweight UAVs in the defense industry, and aircraft/helicopter manufacturers who wanted an upper and lower anti-collision light due to mounting area constraints. The answer came in this incredible new light, only 27 mm high and only 92 grams in weight. Exceeding all TSO intensity requirements and all DO-160F environmental requirements, the RedBaron Mini™ is now the world's smallest anti-collision light.

Main Features:

- Exclusive Lifetime Warranty
- Unbreakable Diamidium™ encapsulation
- 9-32 Volt Input Range
- Vibration Proof
- Waterproof
- Lowest Drag Profile anticollision light
- Anodized aluminum finish
- Extremely light weight

2. WIRING DIAGRAM

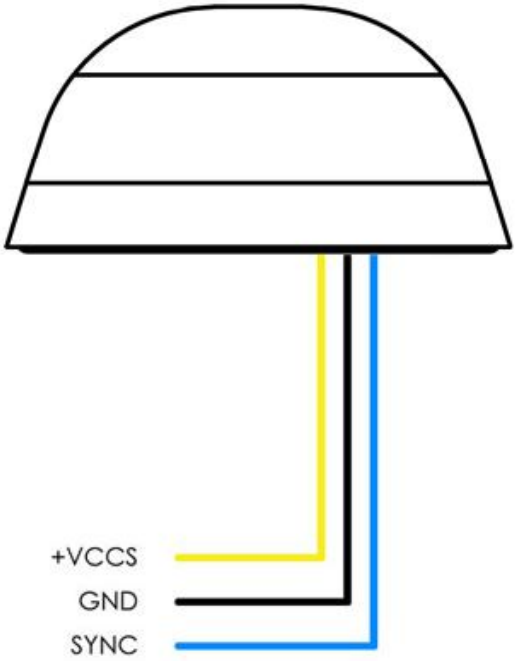

3. CONTROL & POWER INPUTs:

+VCCS - positive strobe power supply line
GND - negative common power supply line
SYNC - strobe synchronization line (mutually interconnect on all installed AveoFlash lights)

4. TECHNICAL SPECIFICATION

Dimensions:	*56.4 mm x 56.4 mm x 27 mm*
	2.22" x 2.22" x 1.063"
Operating Voltage Range:	*9 – 32 Vdc*
Power – strobe:	*4.4 W (22 W peak)*
Current – strobe (@12V):	*0.375 A (1.85 A peak)*
Weight:	110 g / 3.88 oz
Repetition Flash Rate of Strobe:	*50 cycles per minute*
Recommended size of mounting screw:	M5x45mm (DIN912) or equivalent

5. TECHNICAL DRAWING

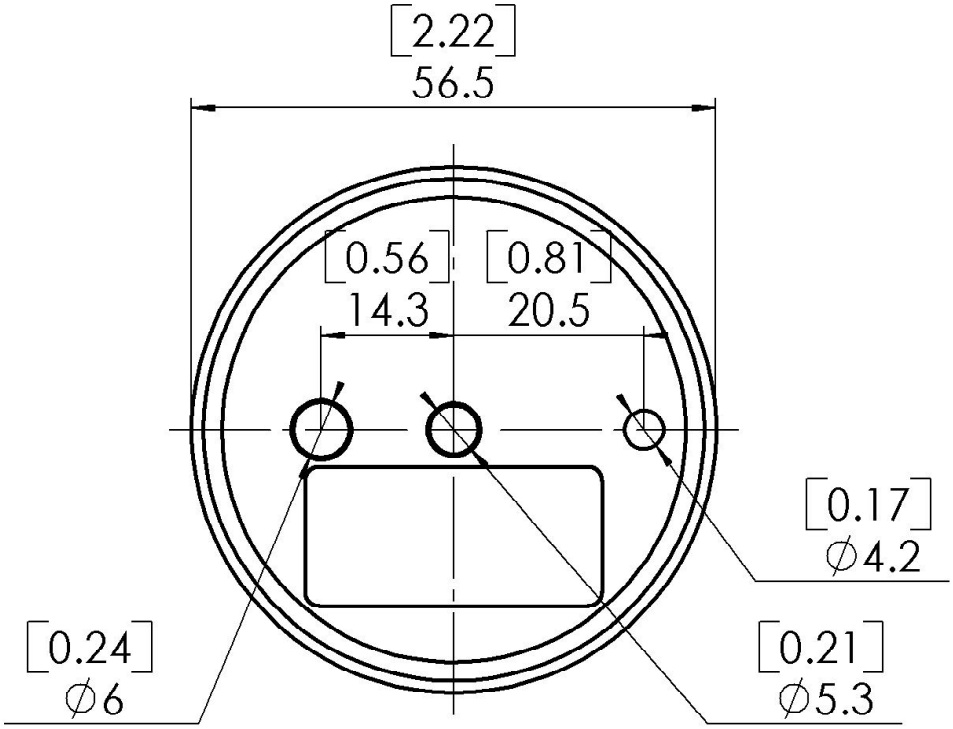

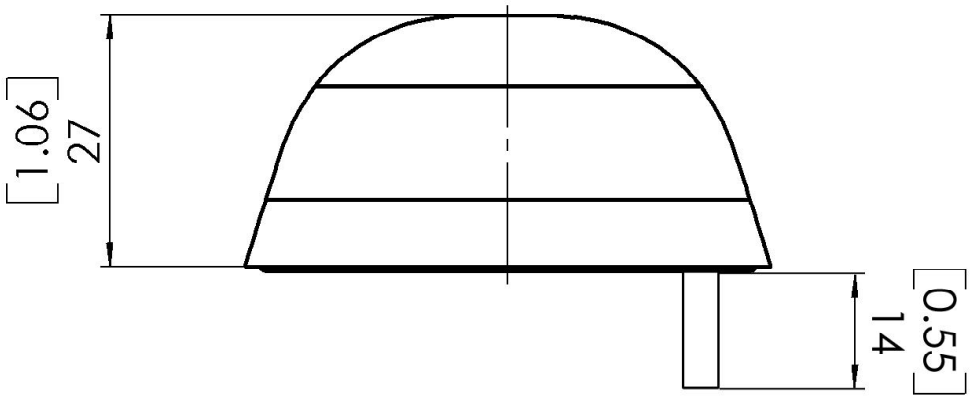

* [inches]
milimetres

6. WIRING CHART

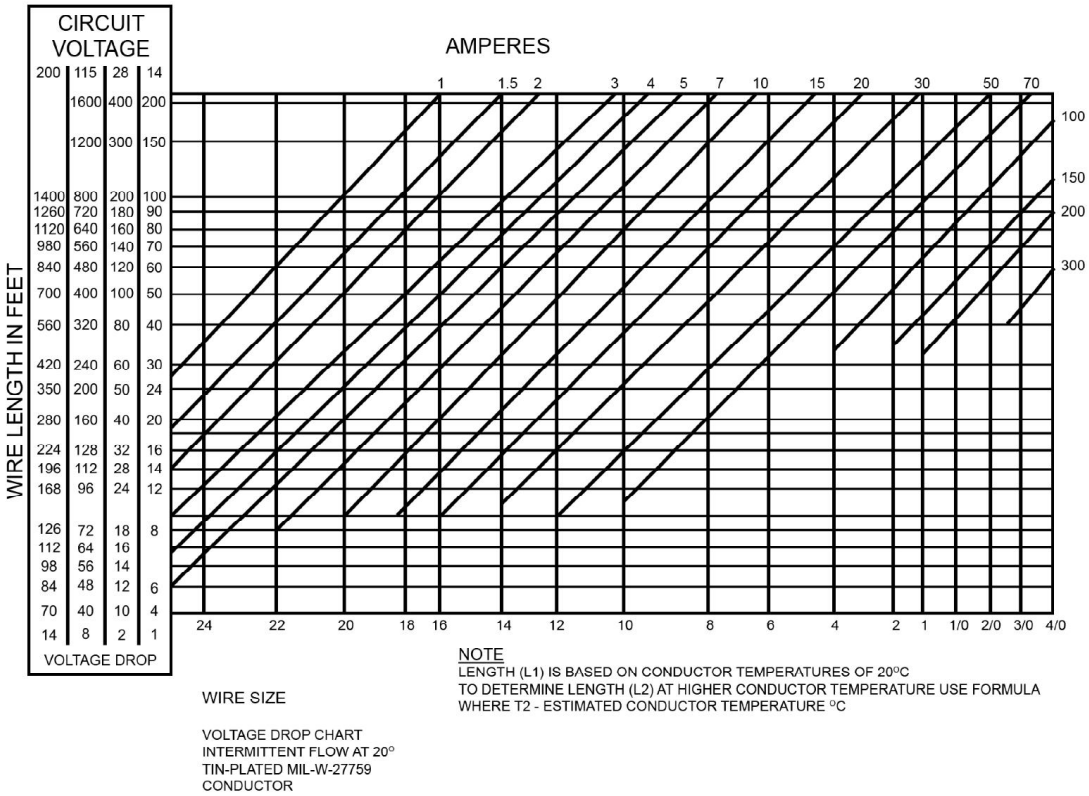

7. TESTING THE FUNCTION OF THE AVEO REDBARON MINI ANTICOLLISION LIGHT BEFORE INSTALLATION

All Aveo Aviation lights undergo rigorous testing prior to being released from our engineering manufacturing department. This testing involves a burn-in time as well as other function testing. No light is released for sale without undergoing this extensive operational testing.

When you receive the Aveo RedBaron light, and wish to test the function of the light prior to installation on your aircraft, please note the following:

1. Please review the written information that is enclosed in the packaging. Warranty information as well as a cautionary note about power supply removal is enclosed with each package.

2. Remove the light from the package. Note that there are three (3) wires coming from each light. These wires are:
    a. Black wire – Ground wire (negative lead)
    b. Yellow wire – Anticollision light function wire (Strobe positive lead)
    c. Blue wire – used if the synchronization of the Aveo lights is selected

3. Testing of the function of the light can be done with a regular 12V/2.5A dc power supply (not a battery chargers). Connect the black wire to the ground (negative) leads of a power supply, then connect the yellow wire to the positive (+) leads on the power supply. The anticollision light should start flashing. Connecting the blue wires from each AveoFlash light together (<u>and not to the ground or positive terminals on the battery</u>) should show that the lights are flashing together and indicates the synchronization feature is working properly. When installed on the aircraft, using the aircraft's power (14 or 28 volts), the light will be at its maximum intensity.

After testing, the light can be installed on the aircraft.

IMPORTANT NOTES:

1. Under <u>no circumstances</u> should any power supply other than a 9-32 Vdc, or a 12/24 volt battery be used to test the light. Do not use: Battery chargers, battery back-up power devices, or other bench avionics testing methods to test the aviation light. The light is functional between 9 and 32 volts. Use of a battery charger or other power unit to test the light will void the warranty and may damage the light.
2. All power supplies for existing strobe lights, flasher beacons, etc. are required to be removed from the aircraft prior to the installation of the Aveo light.

If you have any questions about the installation of the lights, please refer to our web site: www.aveoengineering.com, and check FAQ and other links on our aviation lights web page.

8. CARE AND CLEANING OF YOUR AVEO ENGINEERING AVIATION LIGHTS

When you receive your Aveo Engineering Aviation Lights, they will have been factory polished and ready to install on the aircraft. Upon installation, just give the lights a good coat or two of a quality automotive polish. This should protect the lights from dirt and other environmental factors. Once or twice a month, just refresh the polish and hand buff to bring back the lights to factory like new condition.

If the lights need a deeper cleaning, they can be polished with a good automotive cleaner wax and/or a liquid polishing compound. The liquid polishing compounds can normally be found at automotive parts stores or an automotive paint store. After using a polishing compound, just give the lights another coat of an automotive polish and you will again protect the lights against dirt, etc.. An electric buffing machine, with a lamb's wool cover, can also be used for deeper cleaning and polishing. Under no circumstances should any petroleum based product be used to clean the lights.