AVEO ENGINEERING

Installation Instruction

BEECHCRAFT KING AIR C90-Series

www.aveoengineering.com

TABLE OF CONTENTS

PART 0 MANUAL ADMINISTRATION 3

0.1 DOCUMENT APPROVAL 3

0.2 AMENDMENT RECORD PROCEDURE 4

0.3 AFFECTED PAGES PROCEDURE 4

PART 1 INSTALLATION INSTRUCTION 5

1.1 GENERAL 5

1.2 CONTINUED AIRWORTHINESS 5

1.3 DESCRIPTION 5

1.4 WING POSITION AND RECOGNITION LIGHTS INSTALLATION 6

1.4.1 Wiring Change Position and Strobe Lights 12

1.5 REAR POSITION LIGHT INSTALLATION 19

1.6 ANTI-COLLISION LIGHTS INSTALLATION 22

1.7 TAXI AND LANDING LIGHTS INSTALLATION – NOSE GEAR 28

PART 2 COMPLIANCE DEMONSTRATION 33

Part 0 Manual Administration

0.1 Document approval

This document has been established in accordance with an alternative procedure to DOA approved under EASA AP429.
This installation Instruction is applicable for the Beechcraft models B90/C90/C90A/C90GT/C90GTi/E90/H90.

Compiled by:_____ 17. – Jan. - 2022
Petr Jaros
Engineer, Aveo Engineering Group, s.r.o.

Approved by:_____ 17. – Jan. - 2022
Georg Hartl
Head of DO, Aveo Engineering Group, s.r.o.

0.2 Amendment Record procedure

The master copy of this document shall be kept electronically as a read only document under the control of Aveo Engineering Group, s.r.o. as Master Copy.
ALL amendments to this manual will initiate a raise of Issue
ALL raises of issue will be given a sequential numeric issue ident sequentially from 01 to 99 in Table 01 - ***Issue No:*** Column– Initial Issue of Document will be **"01"**
ALL Issues of this document will be approved by Head of DO

Issue No.	Details	Date	Affected Pages
01	Initial Issue	31. Aug. 2021	ALL
02	Light bracket assembly updated	17. Jan. 2022	8, 11
Table 01: Document Amendment Record Table			

0.3 Affected Pages Procedure

ALL pages affected by ANY raise of issue of this document will be listed in Table 01 - *Affected Pages* Column.
The reason(s) for ALL raise of issue and description of change due to raise of issue will be provided for ALL raises of issue in Table 01 - *Details* Column.
Changes from the previous issue are highlighted by YELLOW HIGHLIGHTING over new content. AND YELLOW HIGHLIGHTING AND CROSSING OUT of deleted content.
Example (~~CROSSING OUT~~)

Part 1 Installation Instruction

1.1 General

This installation is to be performed in accordance to common practice as described in FAR AC 43.13-2B Chapter 4 and in FAR AC 43.13 1B Chapter 11 Section 15 (Bonding) as published by FAA.

The installer is responsible to follow the installation instructions in the latest revision of:

- FAR AC 43.13-2B Chapter 4
- FAR AC 43.13 1B Chapter 11 Section 15
- AVE-WPS-64G-IM
- AVE-PSPSYW-IM
- AVE-RBXP-001-IM
- AVE-N09PANSN-IM
- AVE-H30-001-IM

All drawings applicable for this change are listed in the Drawing List:

- AVE-MOD-037-DL, issue 01

The following appliances carry an ETSO authorization:

- AVE-WPSR-64G & AVE-WPSG-64G – ETSOA 210.10053936
- AVE-RBXPR-001 – ETSOA 210.10055069
- AVE-PSPSYW-T01 – ETSOA 21O.10068603

The change is to be performed using the document AVE-MOD-037-MCS in the latest issue.

The aircraft modified according to this instruction may not be released back to service without the EASA design approval certificate being provided.

1.2 Continued Airworthiness

The aircraft manuals remain fully valid. The inspection intervals and the procedures of the aircraft override the general statements in the component manuals as listed under §1.1.

For inspection of the new lights themselves follow the procedure defined in AVE-MOD-037-SUP-AMM supplied with this modification.

1.3 Description

This modification is the replacement of position lights (type I, II & III), anti-collision lights, strobe lights, taxi lights and the landing lights by LED type lights.

In general the lights are direct replacements and do not require any structural change on the A/C side. Only exemption may be additional attachment holes and installation of anchor nuts in the secondary bracket of the wingtip light installation. The changes in wiring are very minor and are described in this modification or are to be done according to referenced standard practice (e.g. change of connector).

1.4 Wing Position and Recognition Lights Installation

Option 1
Before Installation:

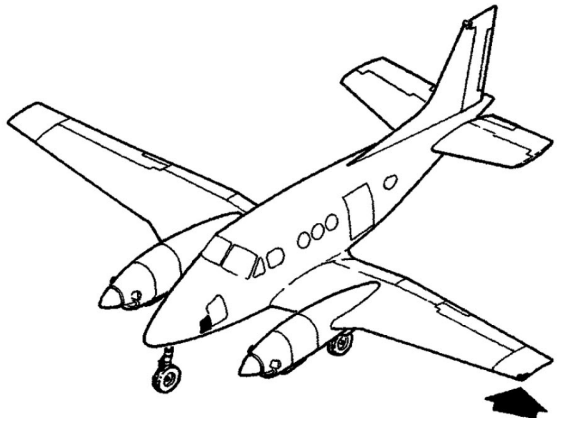

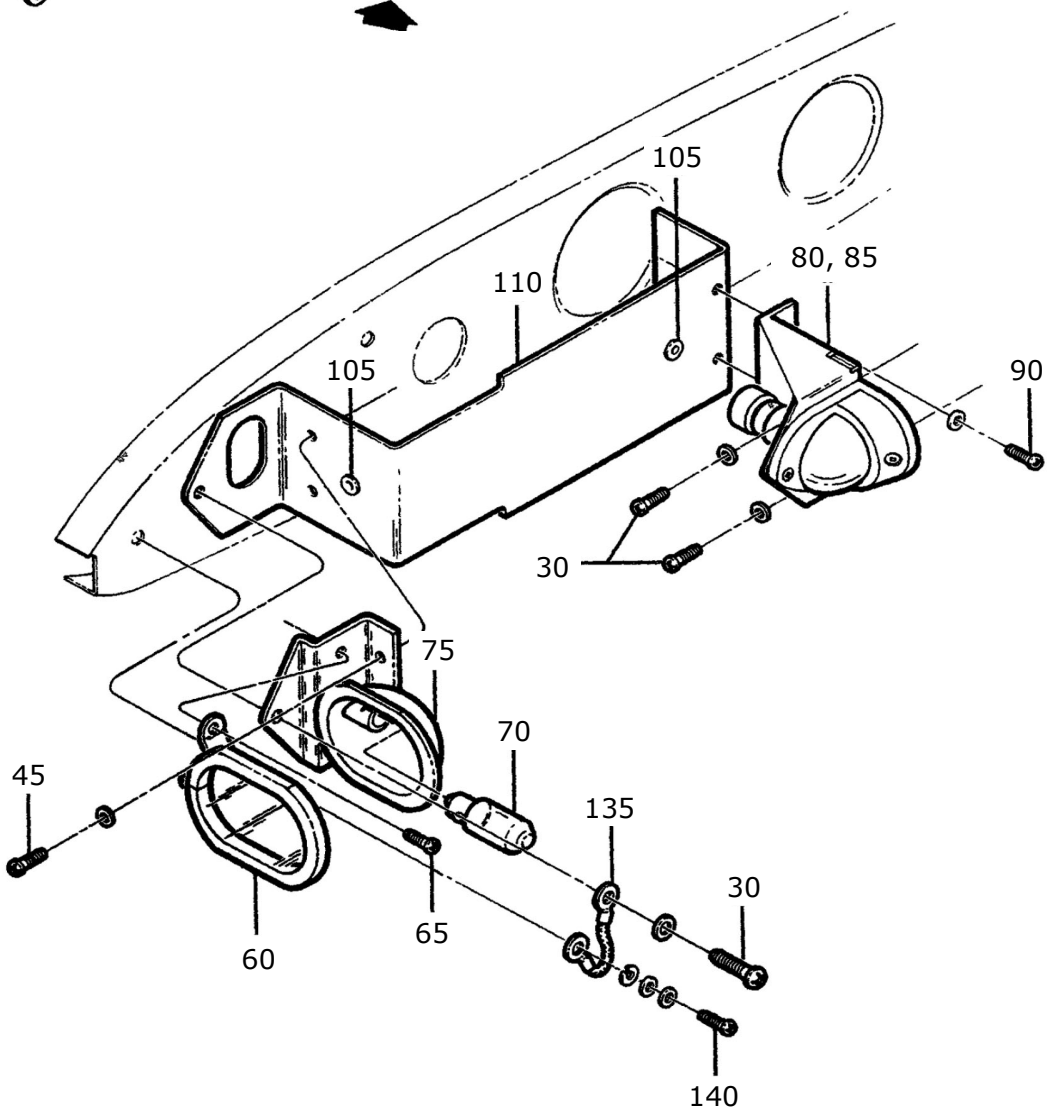

New Installation:

Kit Number: KNG-07

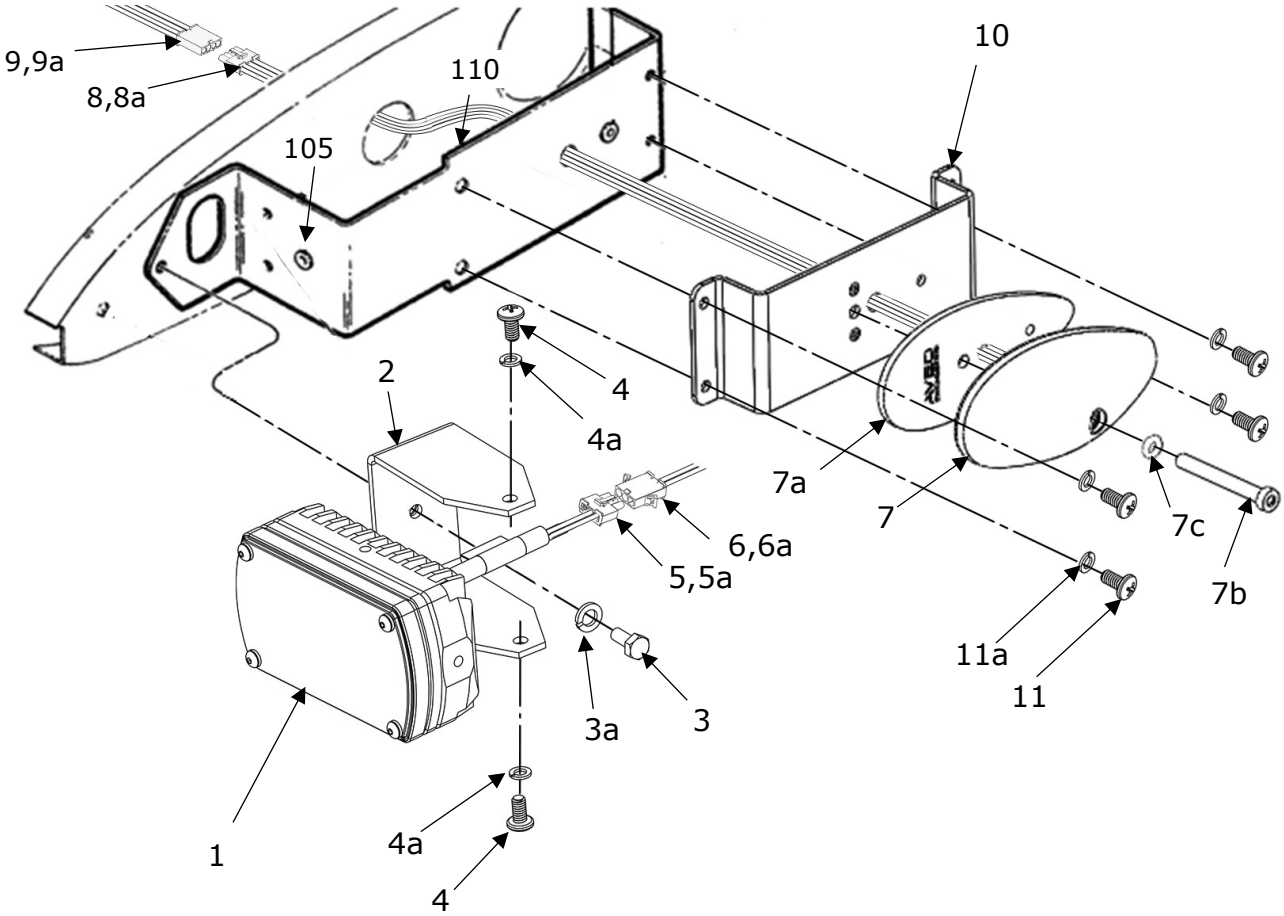

Option 2
Before Installation:

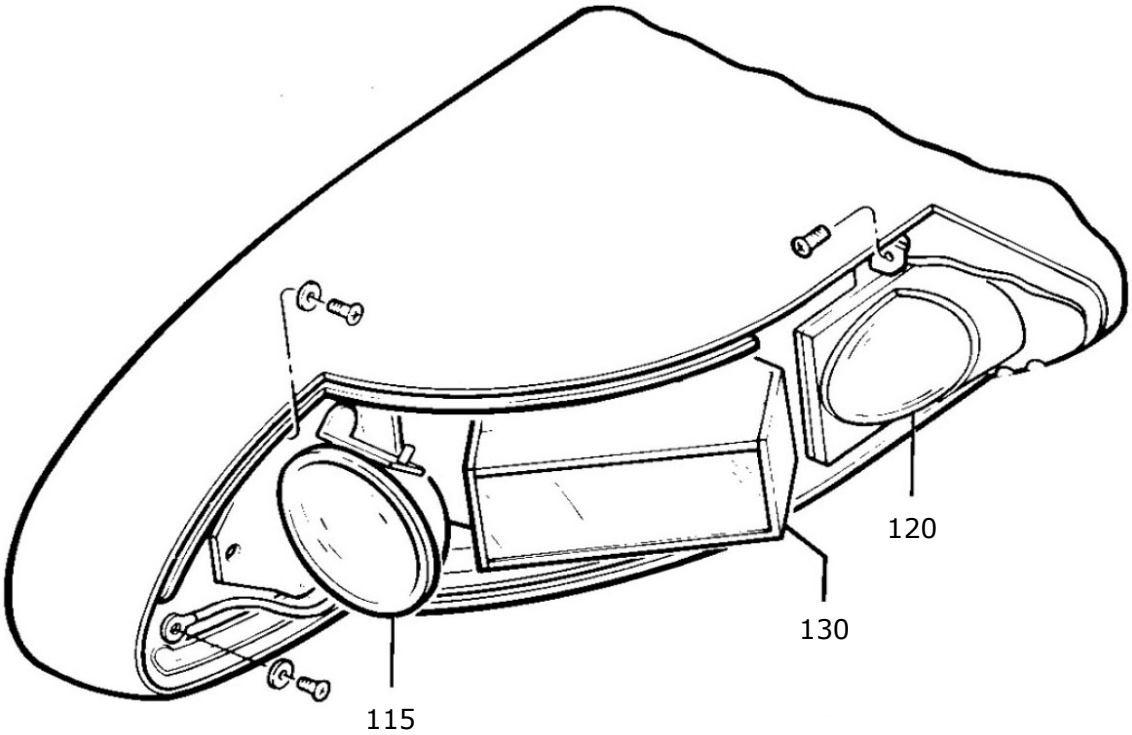

New Installation:

Kit Number: KNG-08

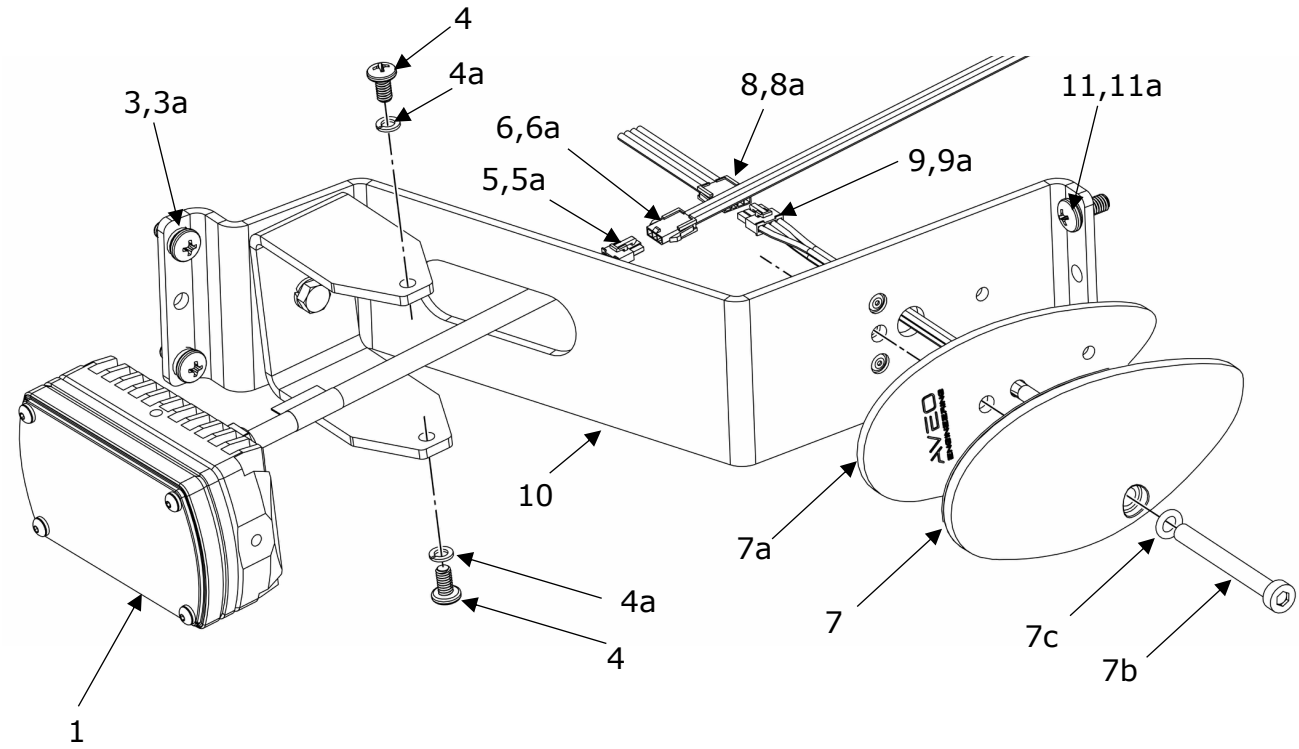

Strobe Box Removal

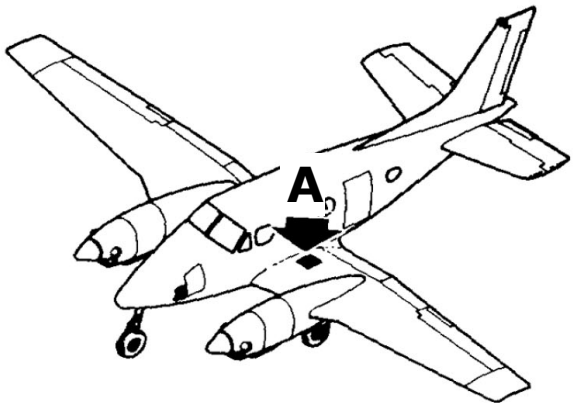

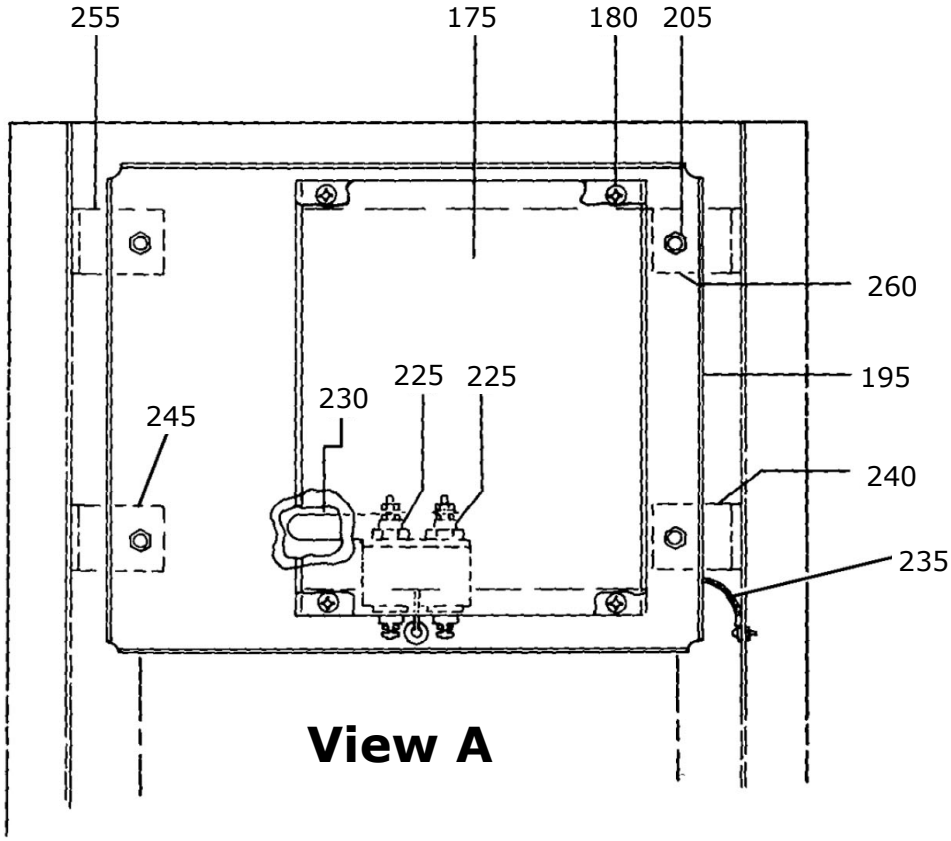

Figure and Index Number	Part Number	Description	Parts Avail.	QTY. Per assy.
	OPTION 1			
1	AVE-N09PANSNT-5WA Mod(2)	Nubion Taxi (55°)		2
2	AVS-A060101248-A60	Nubion Bracket		2
3	AVS-92314A827	Hex Head Screw, 10-32 x 3/8		2
3a	AVS-92146A550	Split Lock Washer, #10		2
4	AVS-91772A192	Pan Head Phillips Screw, 8-32 x 3/8		4
4a	AVS-92146A545	Split Lock Washer, #8		4
5	03091031	3-Pole Connector – Male		2
5a	2092116	Pin		6
6	03092031	3-Pole Connector - Female		2
6a	2091117	Socket		6
7	AVE-WPSR-64G AVE-WPSG-64G	Ultra Galactica Embedded Red Ultra Galactica Embedded Green		1 1
7a	AVS-P001290550-A1A	Gasket		2
7b	AVS-79840905045	Screw M5x45mm		2
7c	AVS-OR00480190N70-D0A	O-ring		2
8	03091041	4-Pole Connector – Male		2
8a	2092116	Pin		8
9	03092041	4-Pole Connector - Female		2
9a	2091117	Socket		8
10	AVS-A060101247-A60	Ultra Bracket Assy 1		2
11	AVS-91772A148	Pan Head Phillips Screw, 6-32 x 1/2		8
11a	AVS-92146A540	Split Lock Washer, #6		8
---	---	---	---	---
	ORIGINAL PARTS			
30	MS35207-262	Screw		6
35	AN960-10L	Washer		6
45	MS35206-230	Screw		4
60	31-3912-1	Lens Assy		2
65	MS35206-227	Screw		4
70	LP1982SP	Lamp		2
75	31-4557-1	Lampholder Assy		2
80	30-1480-1	Light-LH Nav		1
85	30-1480-3	Light-RH Nav		1
90	MS35206-230	Screw		4
95	AN960-6L	Washer		4
105	MS35489-1	Grommet		4
110	101-361156-9	Bracket - LH		1
115	101-361156-10	Bracket – RH		1

135	MS25083-2BB2	Jumper Assy - Bonding		2
140	MS35206-244	Screw		2
	OPTION 2			
1	AVE-N09PANSNT-5WA Mod(2)	Nubion Taxi (55°)		2
~~2~~	~~AVS-A060101248-A60~~	~~Nubion Bracket~~		~~2~~
3	AVS-91772A827	Pan Head Phillips Screw, 10-32 x 3/8		4
3a	AVS-92146A550	Split Lock Washer, #10		4
4	AVS-91772A192	Pan Head Phillips Screw, 8-32 x 3/8		4
4a	AVS-92146A545	Split Lock Washer, #8		4
5	03091031	3-Pole Connector – Male		2
5a	2092116	Pin		6
6	03092031	3-Pole Connector - Female		2
6a	2091117	Socket		6
7	AVE-WPSR-64G AVE-WPSG-64G	Ultra Galactica Embedded Red Ultra Galactica Embedded Green		1 1
7a	AVS-P001290550-A1A	Gasket		2
7b	AVS-79840905045	Screw M5x45mm		2
7c	AVS-OR00480190N70-D0A	O-ring		2
8	03091041	4-Pole Connector – Male		2
8a	2092116	Pin		8
9	03092041	4-Pole Connector - Female		2
9a	2091117	Socket		8
10	AVS-A060101249-A60	Bracket Assy		2
11	AVS-91772A818	Pan Head Phillips Screw, 10-32 x 7/16		4
11a	AVS-92146A550	Split Lock Washer, #10		4
---	---	---	---	---
	ORIGINAL PARTS			
115	30-1414-1	Light Assy - Recognition		1
120	30-1480-1	Light – Red Nav		1
125	30-1480-3	Light – Green Nav		1
130	30-1329-1	Light Assy - Strobe		1
---	---	---	---	---
	STROBE BOX			
175	60-1750-3	Power Supply – Strobe Light		1
180	MS35207-264	Screw		4
195	100-360022-37 100-360022-45	Bracket Assy – Power Supply Mounting		1
205	130909B15	Bolt		4
225	A1437	Filter		2
230	100-360039-1	Bonding Strap		1
235	MS25083-2BB6	Jumper Assy – Bonding, Power Supply		1
240	50-360070-17	Bracket – Mount Support		1
245	50-360070-19	Bracket – Mount Support		1

255	31-3009	Bracket – Mount Support		1
260	50-360070-29	Bracket – Mount Support		1

NOTES

1. Remove wingtip lens as per Aircraft Maintenance Manual (AMM).
2. Remove the light assemblies shown in Option 1 or 2 in accordance to the AMM.
3. Disconnect the wire bundle from the recognition, the position and the strobe light.
4. Inspect the installation area for corrosion and correct according to AMM if required.
5. Install brackets, items 2 and 10 as described, using fasteners, items 3 and 11. Pick up fastener location from aircraft.
6. Remove strobe light power supply according to AMM. Connect the wingtip position and strobe light unit as per wiring change description.
7. Connect the wiring of the Nubion recognition light as per AVE-N09PANSN-IM and common practice. Regard lights polarity.
8. Install the wingtip light item 7 and recognition light item 1.
9. Install lens per AMM.

1.4.1 Wiring Change Position and Strobe Lights

The original aircraft has separate position and strobe lights installed. These two units are replaced by one unit with the same functionality.

The wiring manual of the aircraft covers the different configurations. The configurations and the required wiring changes are described on the following pages. The changes are described on the bases of the strobe wiring. The navigation / position light wires are just connected into the new connectors at the positions indicated P1 to P3. The different configurations of the navigation / position light installation remain unchanged.

A/C S/N
LJ-1 thru LJ-113

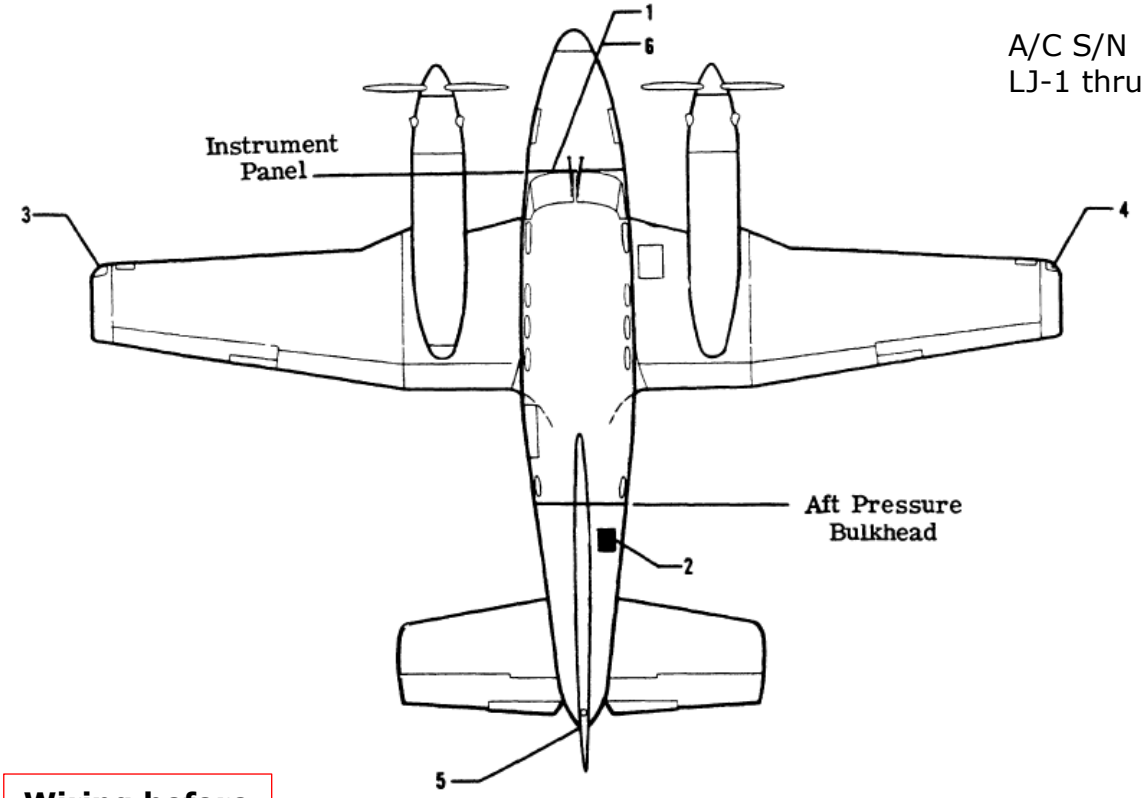

Wiring before modification:

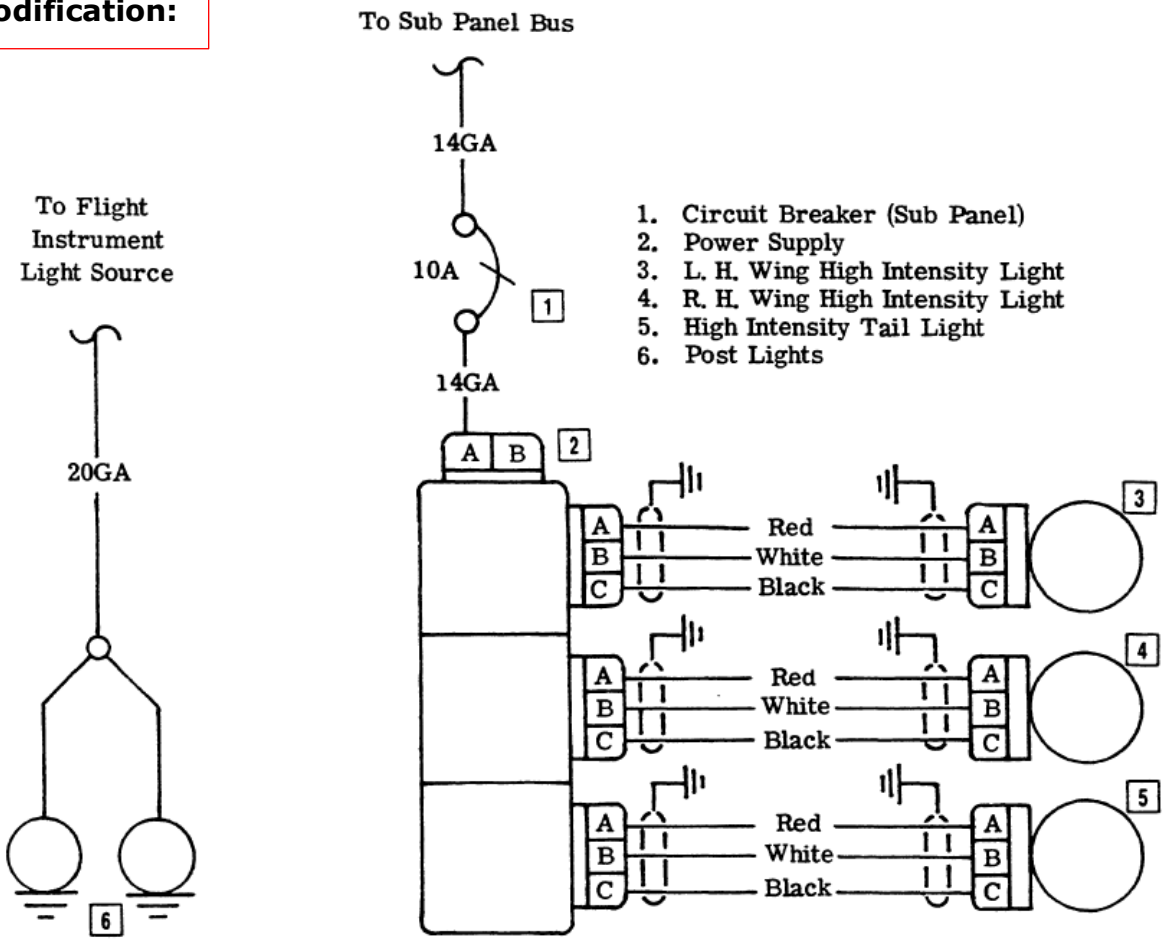

1. Circuit Breaker (Sub Panel)
2. Power Supply
3. L. H. Wing High Intensity Light
4. R. H. Wing High Intensity Light
5. High Intensity Tail Light
6. Post Lights

Wiring after modification:

A/C S/N
LJ-1 thru LJ-113

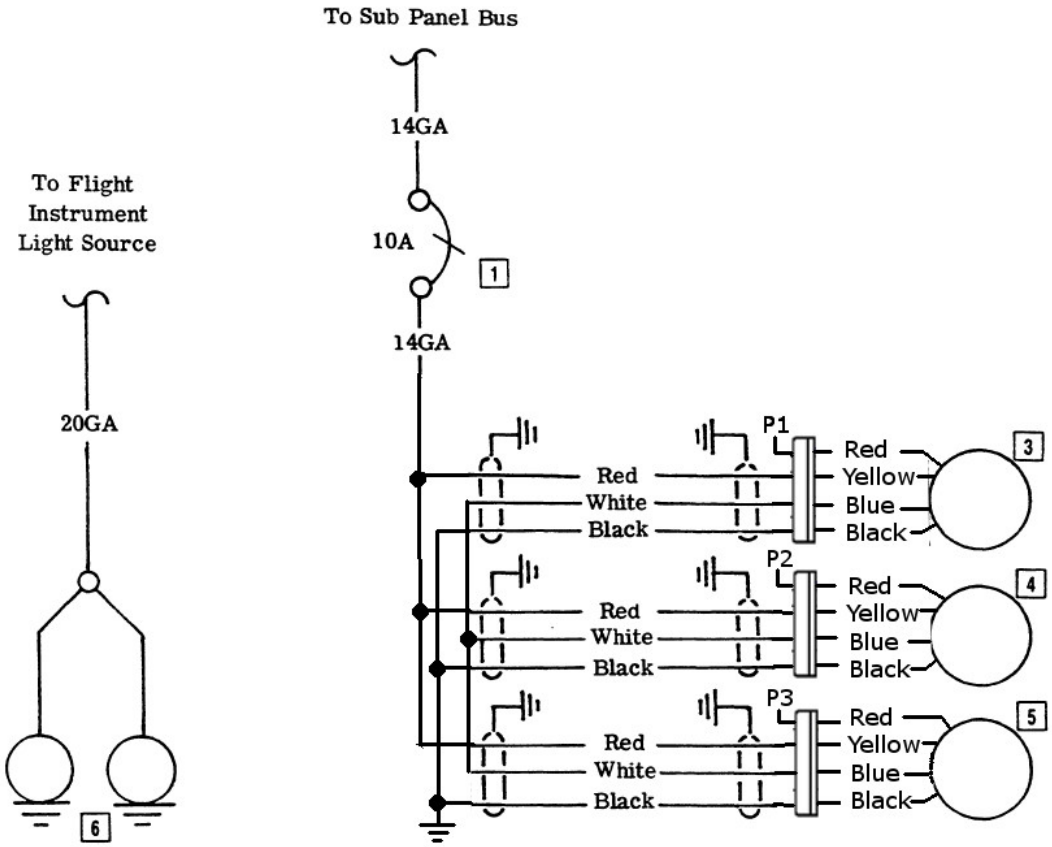

Note:
If two tail position / strobe lights are installed, then the second is wired parallel to the first.

1. Circuit Breaker (Sub Panel)
2. Power Supply (removed)
3. L.H. Wing Ultra Galactica
4. R.H. Wing Ultra Galactica
5. Tail light PosiStrobe Titania

P1 Connection red position light 28V
P2 Connection green position light 28V
P3 Connection white position light 28V

A/C S/N
LJ-114 thru LJ-701
LW-1 thru LW-200

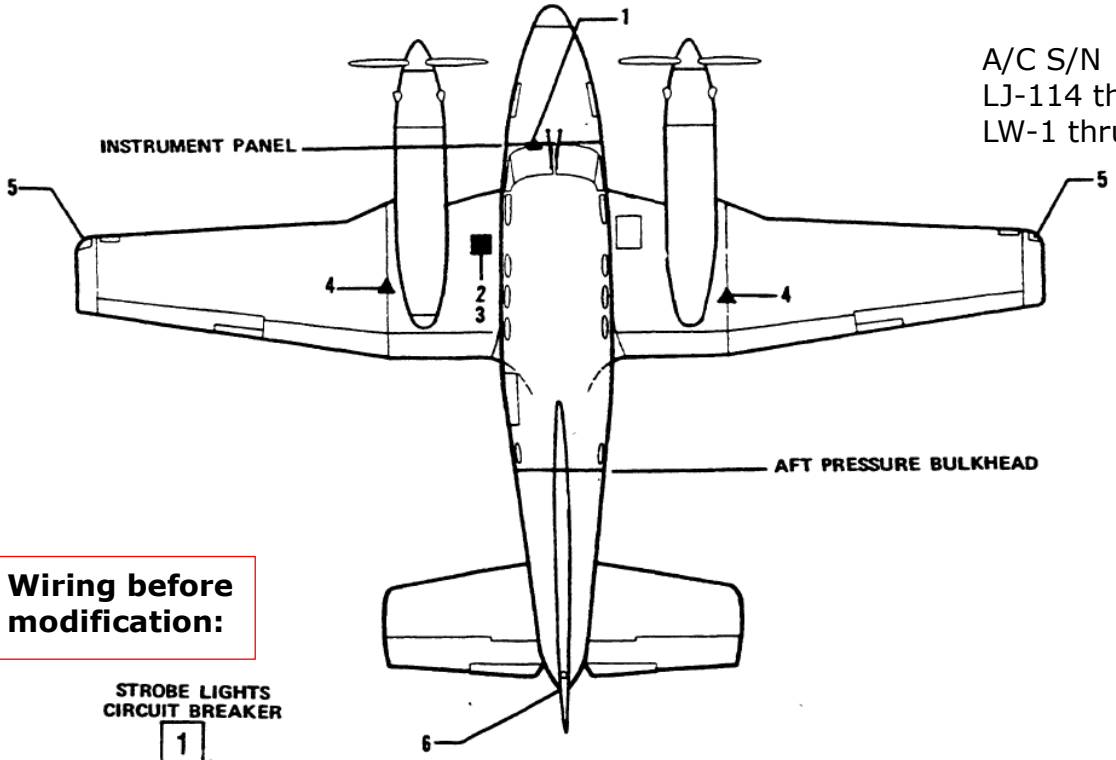

Wiring before modification:

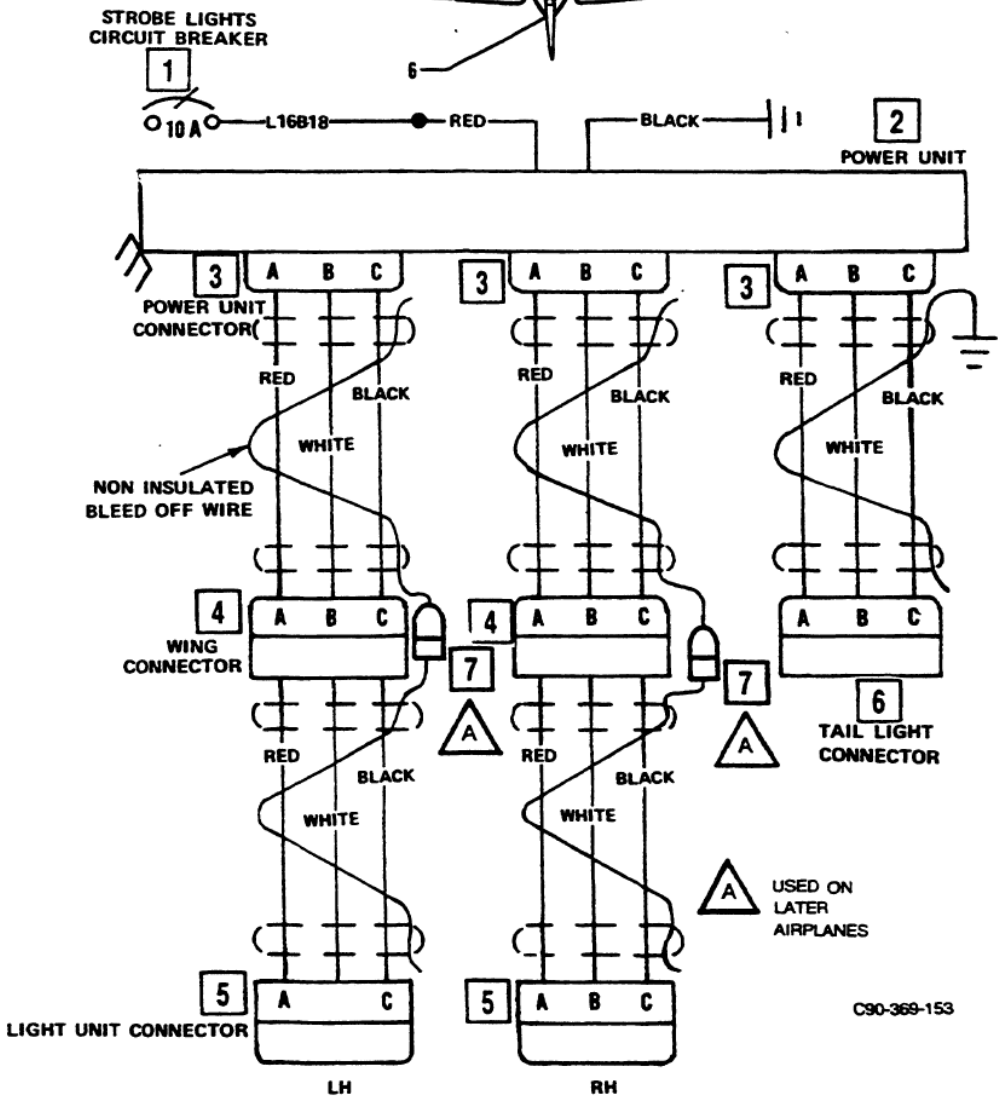

Wiring after modification:

A/C S/N
LJ-114 thru LJ-701
LW-1 thru LW-200

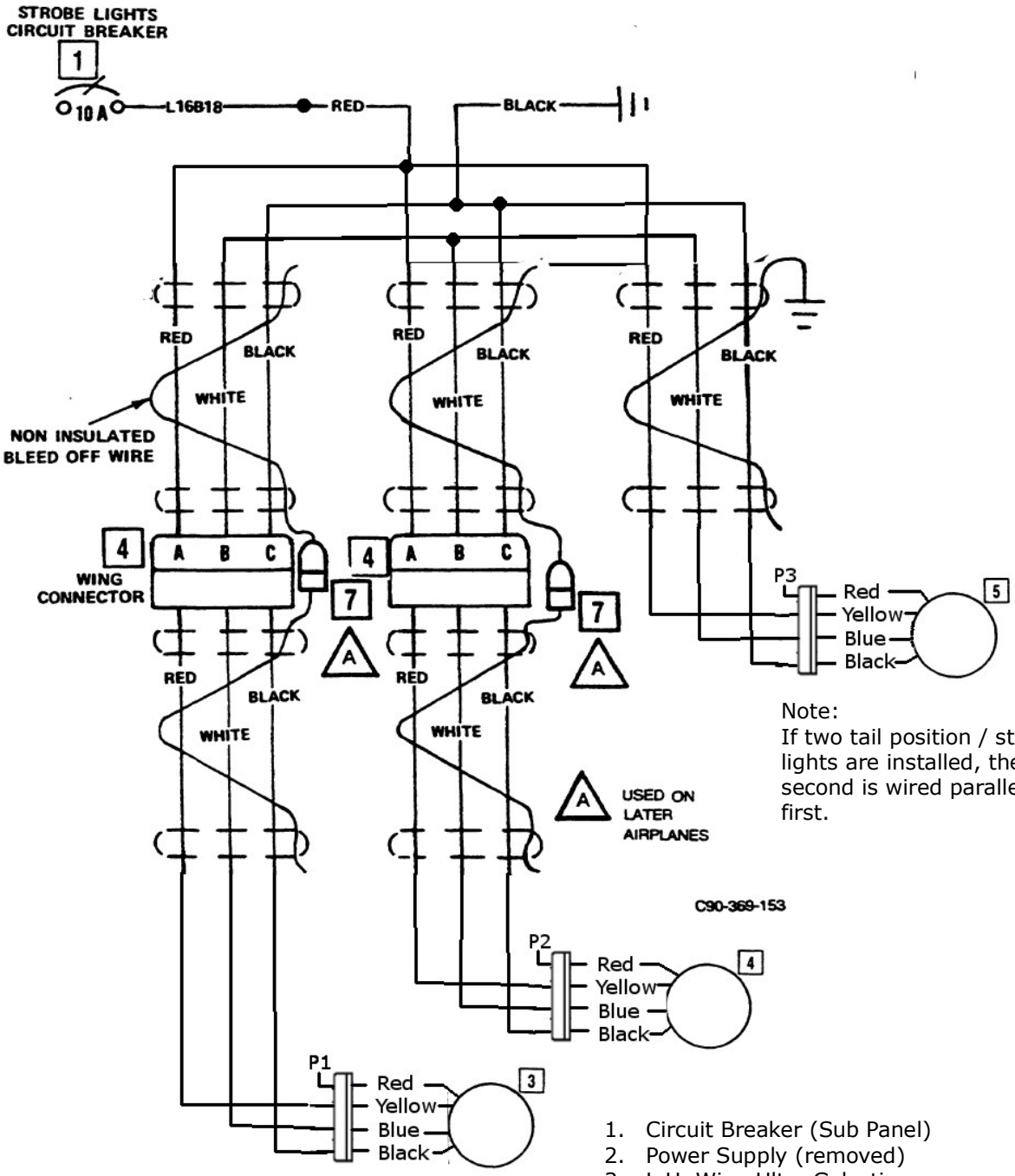

Note:
If two tail position / strobe lights are installed, then the second is wired parallel to the first.

1. Circuit Breaker (Sub Panel)
2. Power Supply (removed)
3. L.H. Wing Ultra Galactica
4. R.H. Wing Ultra Galactica
5. Tail light PosiStrobe Titania

P1 Connection red position light 28V
P2 Connection green position light 28V
P3 Connection white position light 28V

A/C S/N
LJ-702 and after
LW-201 and after

Wiring before modification:

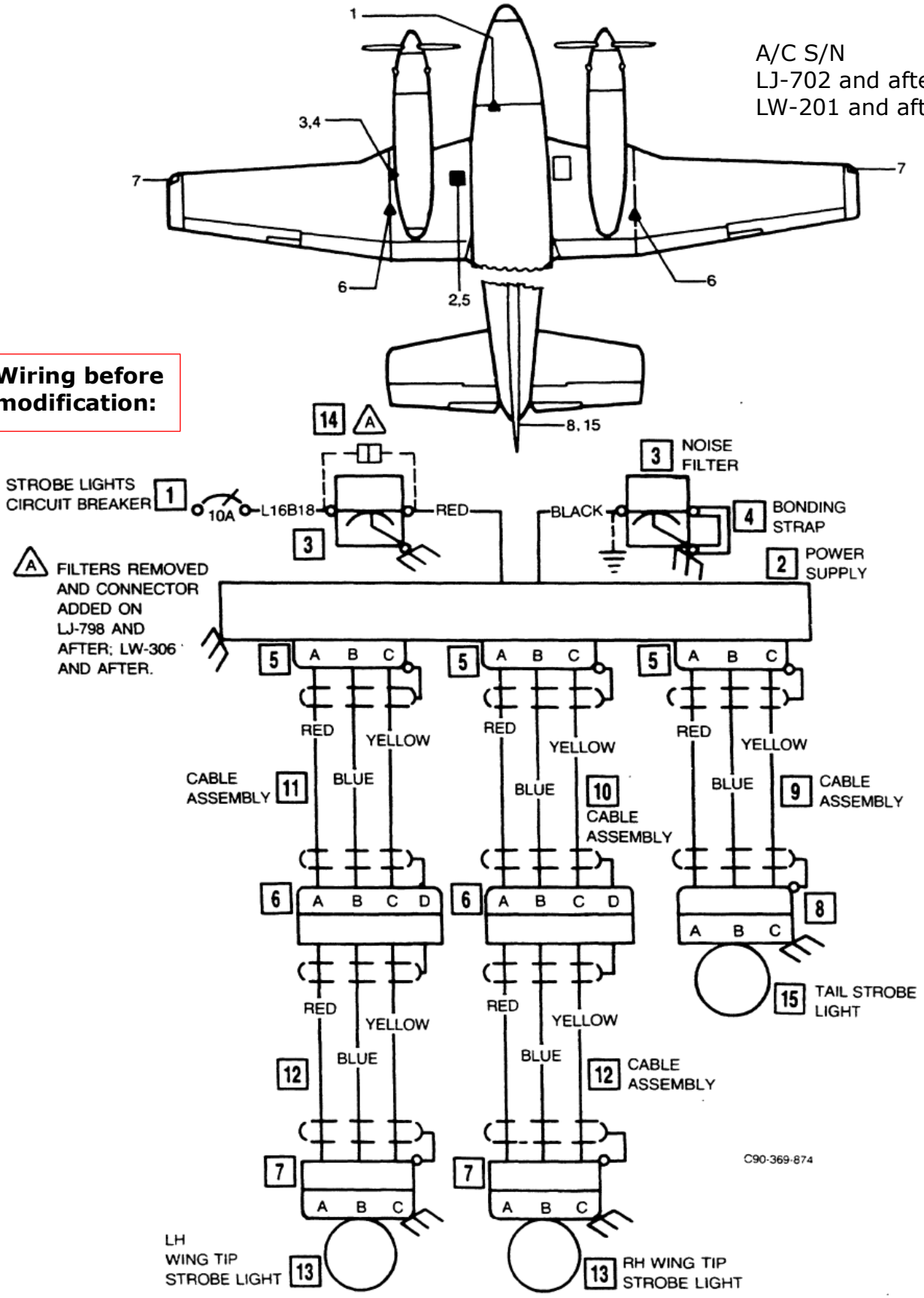

Wiring after modification:

A/C S/N
LJ-702 and after
LW-201 and after

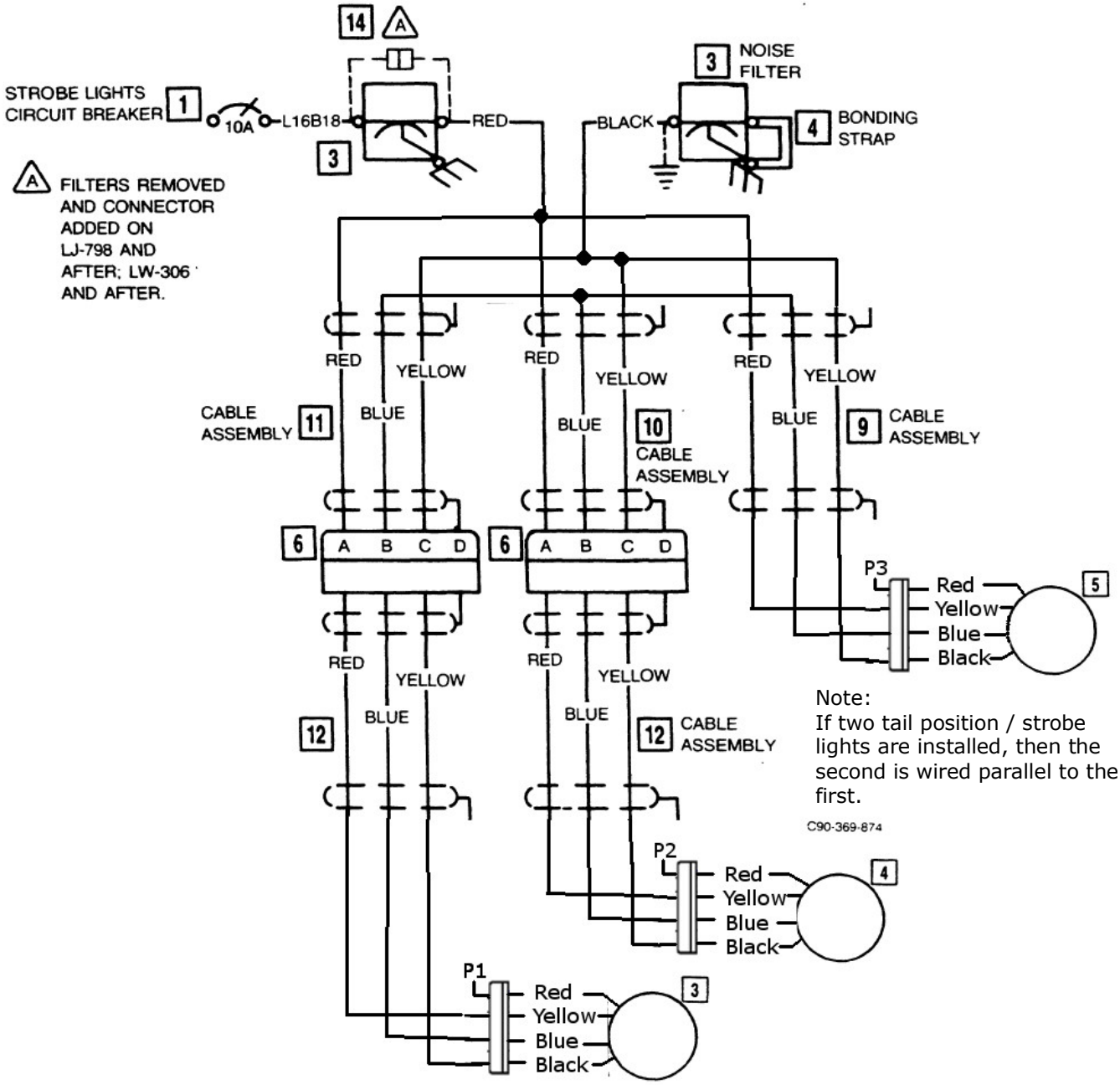

Note:
If two tail position / strobe lights are installed, then the second is wired parallel to the first.

1. Circuit Breaker (Sub Panel)
2. Power Supply (removed)
3. L.H. Wing Ultra Galactica
4. R.H. Wing Ultra Galactica
5. Tail light PosiStrobe Titania

P1 Connection red position light 28V
P2 Connection green position light 28V
P3 Connection white position light 28V

1.5 Rear Position Light Installation

Before Installation:

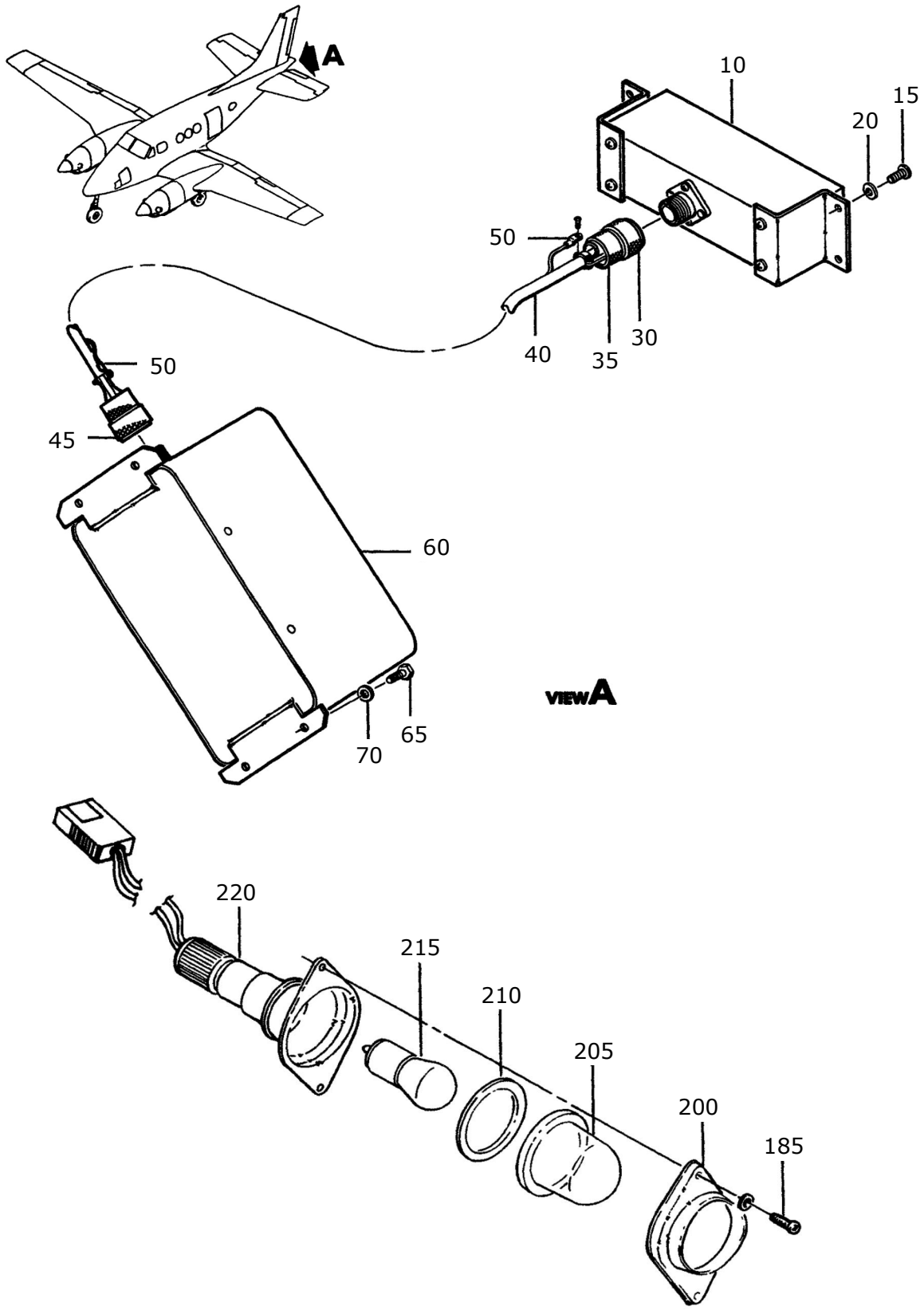

New Installation:

Kit Number: KNG-09

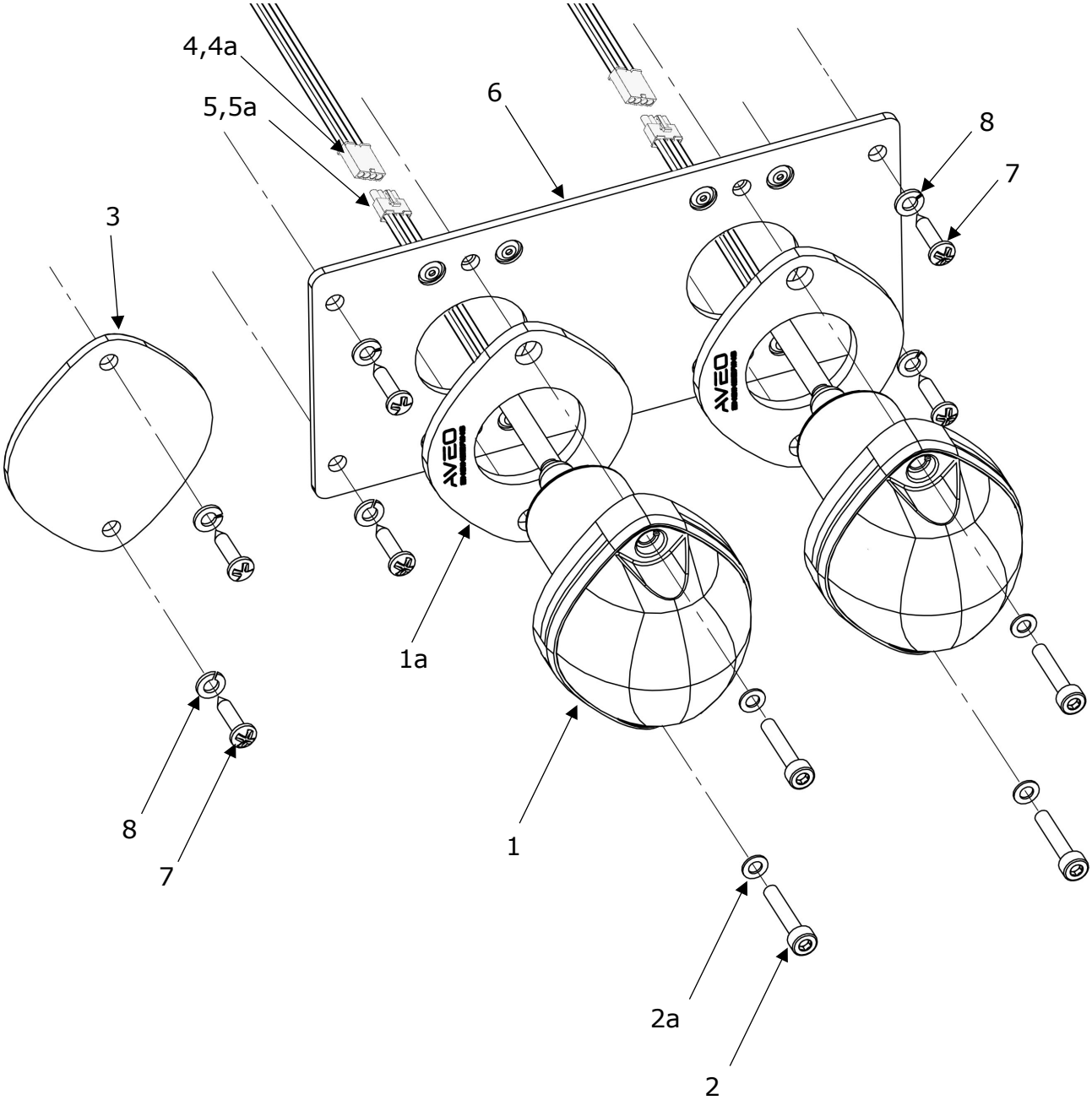

Figure and Index Number	Part Number	Description	Parts Avail.	QTY. Per assy.
1	AVE-PSPSYW-T01	PosiStrobe Titania		2
1a	AVS-P000105638-A10	Gasket		2
2	AVS-92196A151	Socket Head Cup Screw, 6-32 x 3/4		4
2a	AVS-90295A359	Flat Washer – Nylon, #4		4
3	AVS-A060101242-A60	Cover		1
4	03091041	4-Pole Connector – Male		2
4a	2092116	Pin		8
5	03092041	4-Pole Connector - Female		2
5a	2091117	Socket		8
6	AVS-A060101245-A60	Bracket		1
7	AVS-91772A193	Pan Head Phillips Screw, 8-32 x 7/16		6
8	AVS-92146A545	Split Lock Washer, #8		6
---	---	---	---	---
	ORIGINAL PARTS			
10	100-384118-5	Light Assy – Tail Strobe		1
30	MS3456L10SL3S	Connector – Tail Strobe Light		1
35	MS3417-10N	Clamp - Cable		2
40	M7078/3-16-3	Cable		1
45	MS2456L10SL3P	Plug – Connector, Strobe Light Power Supply		1
50	1115110E8	Terminal		2
60	100-384118-21	Power Supply – Tail Strobe Light		1
65	130909B14	Bolt		4
70	AN960-10L	Washer		4
185	MS35265-31	Screw		2
200	A2108	Retainer – Lens		1
205	A4513-1	Lens		1
210	A2109-3	Gasket – Lens		1
215	1683	Bulb		1
220	A3510	Base and Lampholder Assy		1

NOTES

1. Remove rear position / strobe light in accordance to the aircraft maintenance manual.
2. Disconnect the wire bundle from the position light
3. Remove strobe box (View A) and aft strobe light according to the aircraft maintenance manual and modify the wiring.
4. Inspect the installation area for corrosion and correct according to AMM if required
5. Connect the new light's wires into the bundle as described in common practice per FAR AC 43.13-2B Chapter 4
6. Install item 1 to 6 as described.
7. Close open holes of unused light with cover item 3.

1.6 Anti-collision Lights Installation

Option 1

Kit Number: KNG-10

Upper installation
(Replacement of Self-contained Strobe Anti-collision Light Assembly for J0502-J1137, W0001-W9999)

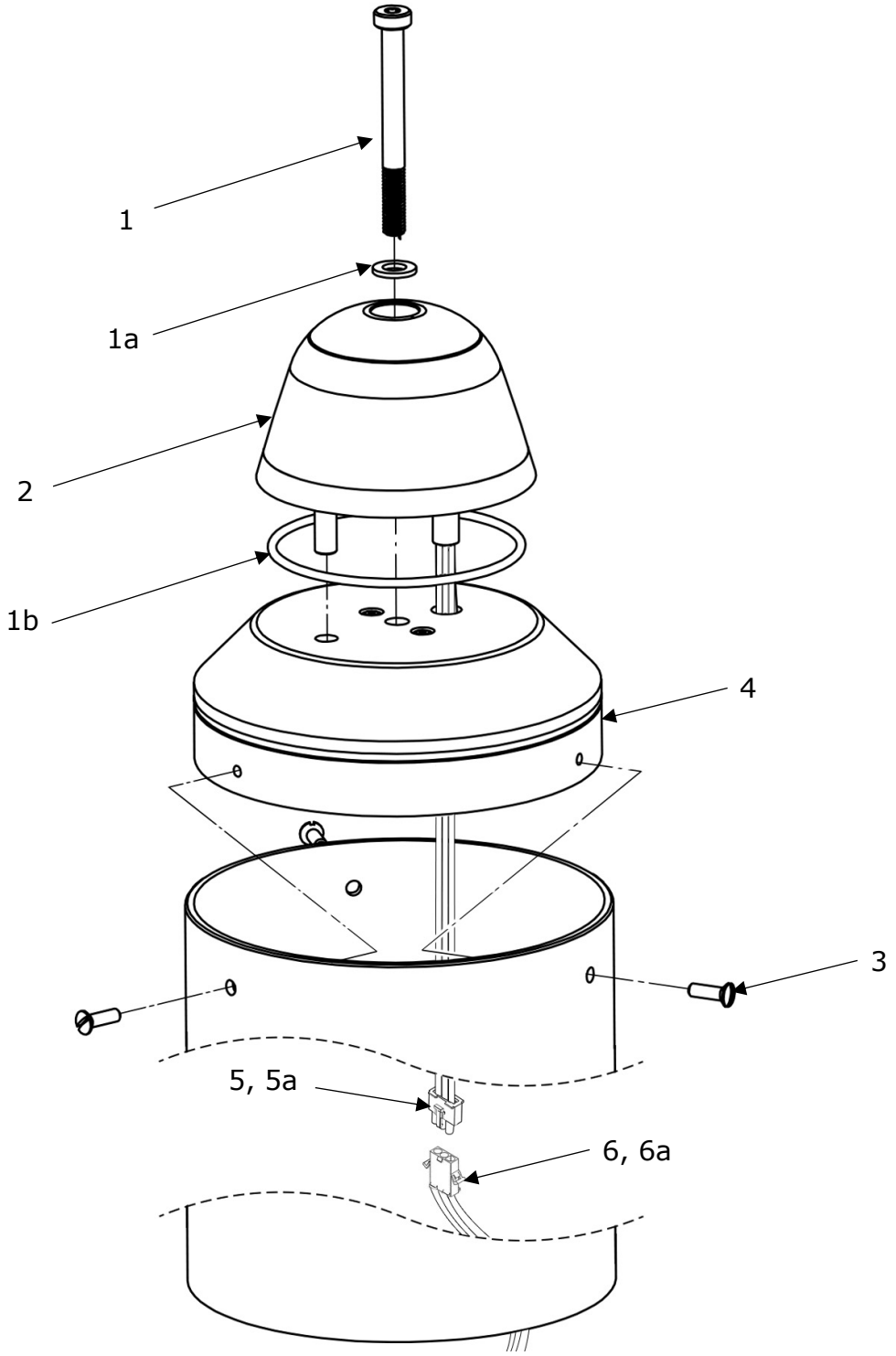

Kit Number: KNG-04

Bottom installation

(Replacement of Self-contained Strobe Anti-collision Light Assembly for J0502-J1137, W0001-W9999)

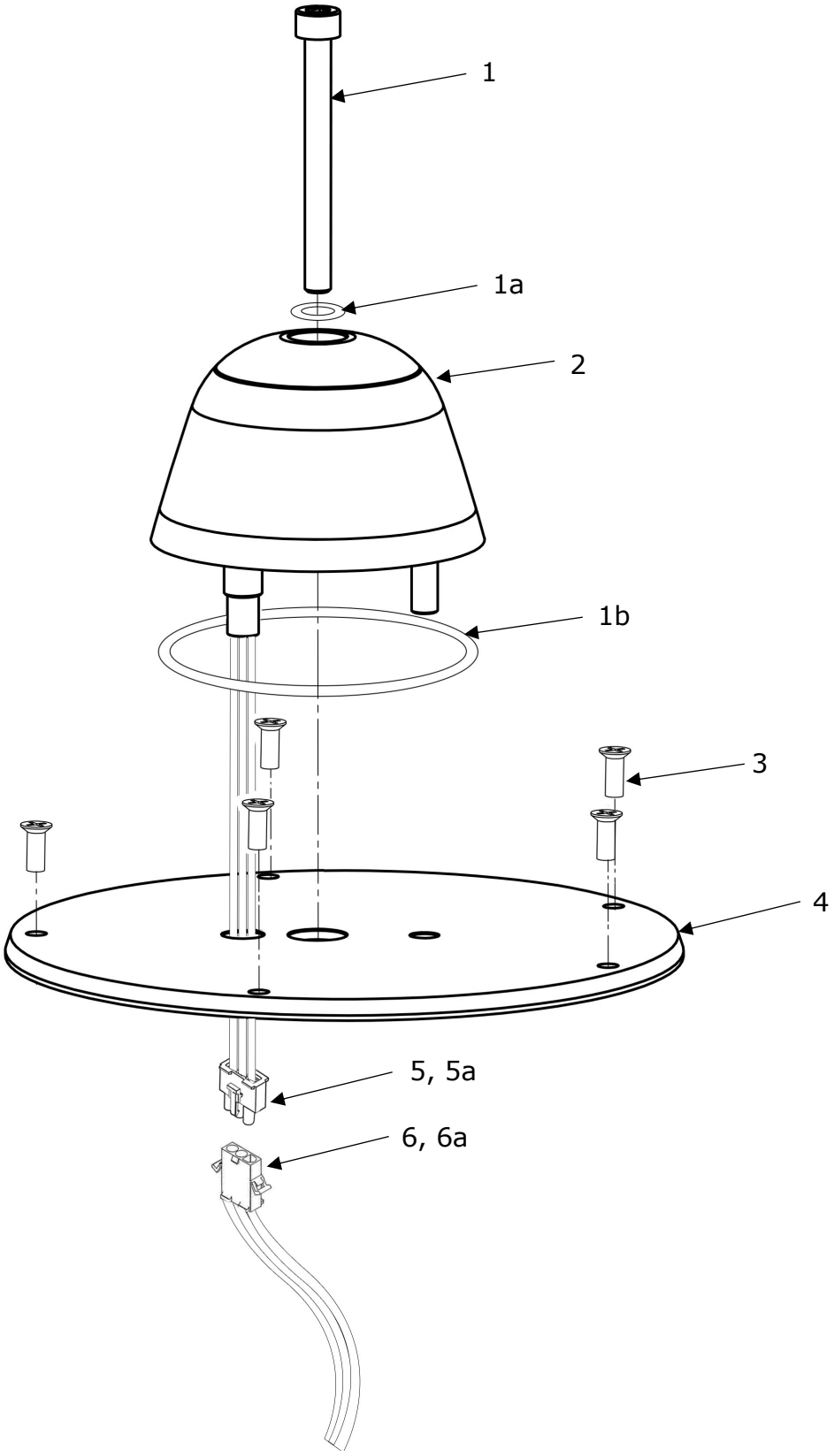

Option 2

Kit Number: KNG-11

Upper installation

(Replacement of Self-contained Strobe Anti-collision Light Assembly for J1138-J9999)

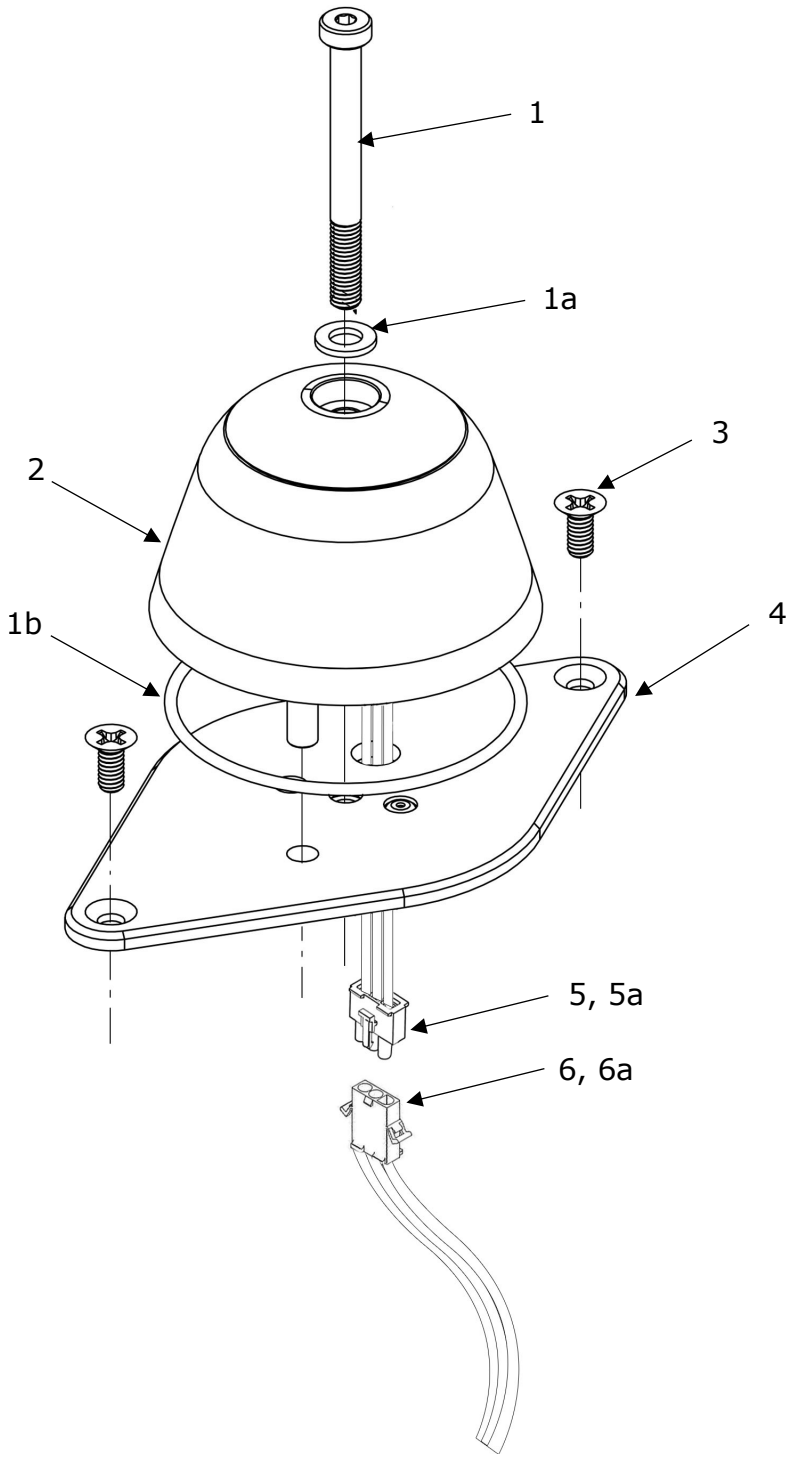

Bottom installation

(Replacement of Self-contained Strobe Anti-collision Light Assembly for J1138-J9999)

Kit Number: KNG-12

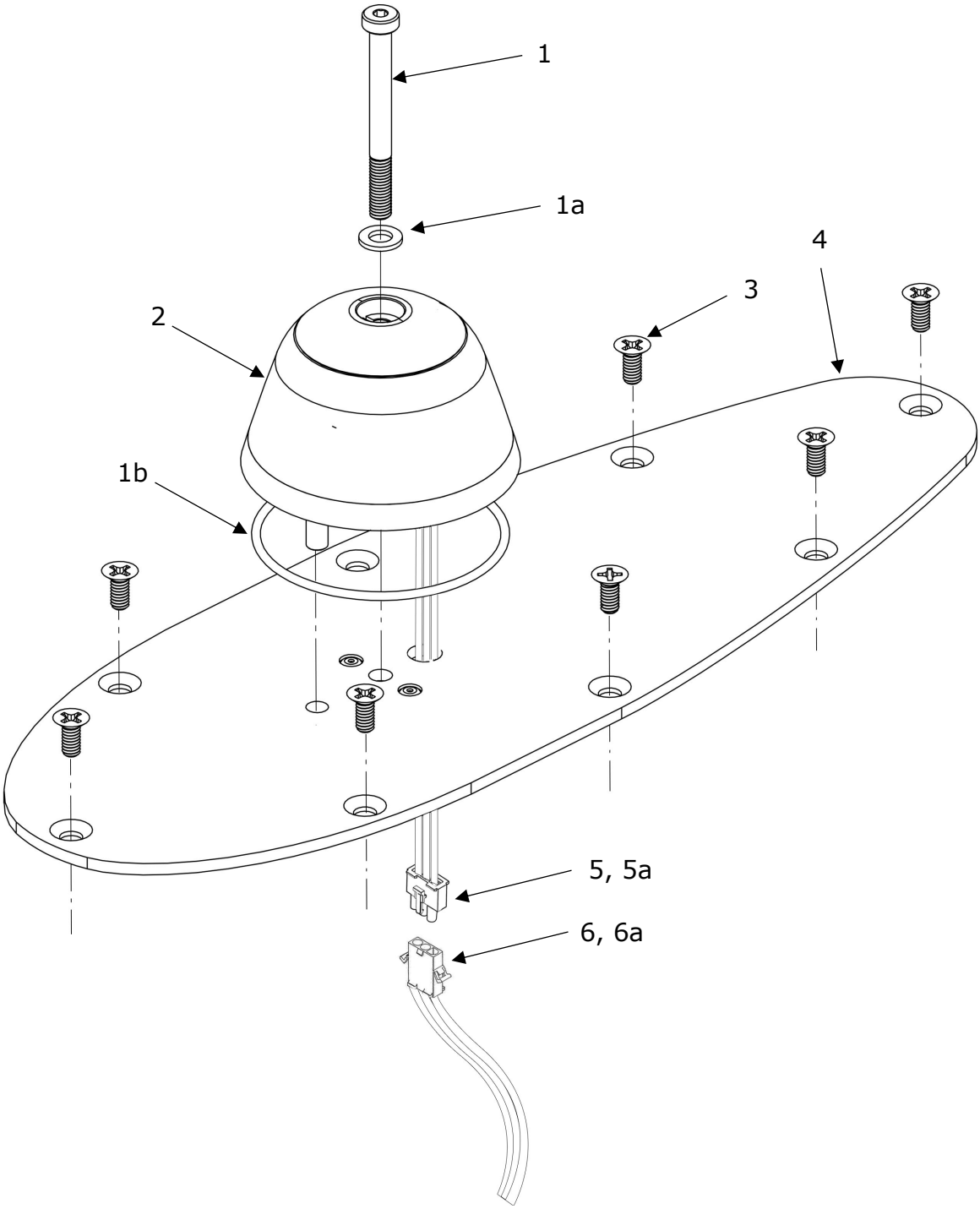

Figure and Index Number	Part Number	Description	Parts Avail.	QTY. Per assy.
	OPTION 1			
	UPPER INSTALLATION			
1	AVS-79840905050	Screw M5x50mm		1
1a	AVS-170299005	Flat Washer – Nylon		1
1b	AVS-OR05302N70-D0A	O-Ring		1
2	AVE-RBXPR-001	RedBaron XP Galactica		1
3	AVS-91771A941	Countersunk Flat Head Screw, 6-32 x 5/16		3
4	AVS-A020101340-A6D	RedBaron XP Adapter Assy		1
5	03091031	3-Pole Connector – Male		1
5a	2092116	Pin		3
6	03092031	3-Pole Connector - Female		1
6a	2091117	Socket		3
	BOTTOM INSTALLATION			
1	AVS-79840905050	Screw M5x50mm		1
1a	AVS-170299005	Flat Washer – Nylon		1
1b	AVS-OR05302N70-D0A	O-Ring		1
2	AVE-RBXPR-001	RedBaron XP Galactica		1
3	AVS-91771A944	Countersunk Flat Head Screw, 6-32 x 1/2		5
4	AVS-P000600093-A6A	RedBaron XP Light Replacement Adapter 2		1
5	03091031	3-Pole Connector – Male		1
5a	2092116	Pin		3
6	03092031	3-Pole Connector - Female		1
6a	2091117	Socket		3
	OPTION 2			
	UPPER INSTALLATION			
1	AVS-79840905050	Screw M5x50mm		1
1a	AVS-170299005	Flat Washer – Nylon		1
1b	AVS-OR05302N70-D0A	O-Ring		1
2	AVE-RBXPR-001	RedBaron XP Galactica		1
3	AVS-91771A950	Countersunk Flat Head Screw, 8-32 x 1/2		2
4	AVS-A020107400-A60	Adapter Plate Assy 2		1
5	03091031	3-Pole Connector – Male		1
5a	2092116	Pin		3
6	03092031	3-Pole Connector - Female		1
6a	2091117	Socket		3

	BOTTOM INSTALLATION			
1	AVS-79840905050	Screw M5x50mm		1
1a	AVS-170299005	Flat Washer – Nylon		1
1b	AVS-OR05302N70-D0A	O-Ring		1
2	AVE-RBXPR-001	RedBaron XP Galactica		1
3	AVS-91771A956	Countersunk Flat Head Screw, 10-24 x 1/2		8
4	AVS-A020102340-A60	Adapter Plate Assy 1		1
5	03091031	3-Pole Connector – Male		1
5a	2092116	Pin		3
6	03092031	3-Pole Connector - Female		1
6a	2091117	Socket		3

NOTES

1. Remove lower flashing beacon in accordance to the aircraft maintenance manual.
2. Disconnect the wire bundle from the flashing beacon
3. Inspect the installation area for corrosion and correct according to AMM if required
4. Splice the new light's wires into the bundle according to the referenced installation manuals and the common practice FAR AC 43.13-2B Chapter 4
5. Install items 1 to 6 as described in both options. Drill hole to substructure for anti-rotation pin as required.
6. Remove upper flashing beacon in accordance to the aircraft maintenance manual.
7. Disconnect the wire bundle from the flashing beacon
8. Splice the new light's wires into the bundle according to the referenced installation manuals and the common practice FAR AC 43.13-2B Chapter 4
9. Install items 1 to 6 as described in both options. Drill hole to substructure for anti-rotation pin as required.

1.7 Taxi and Landing Lights Installation – Nose Gear

Before installation:

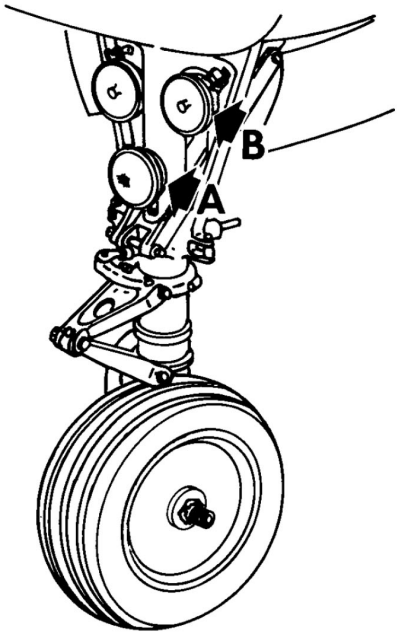

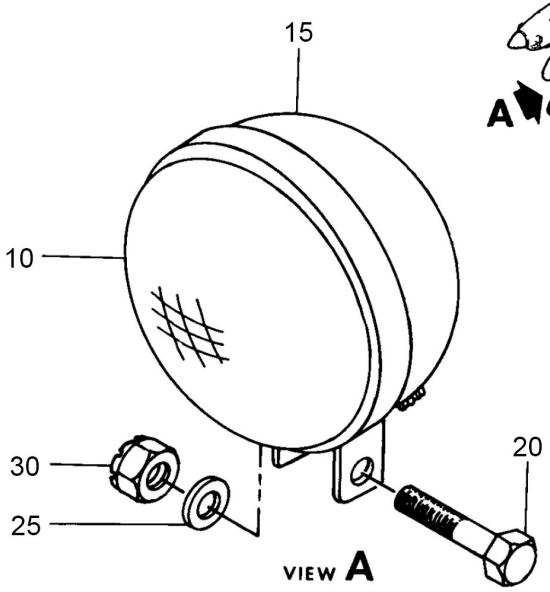

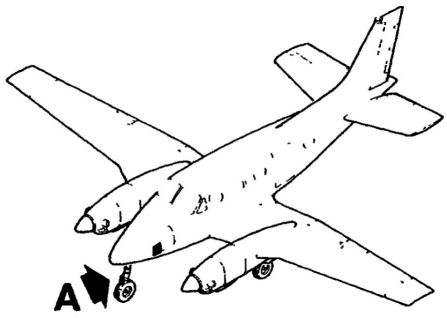

Option A

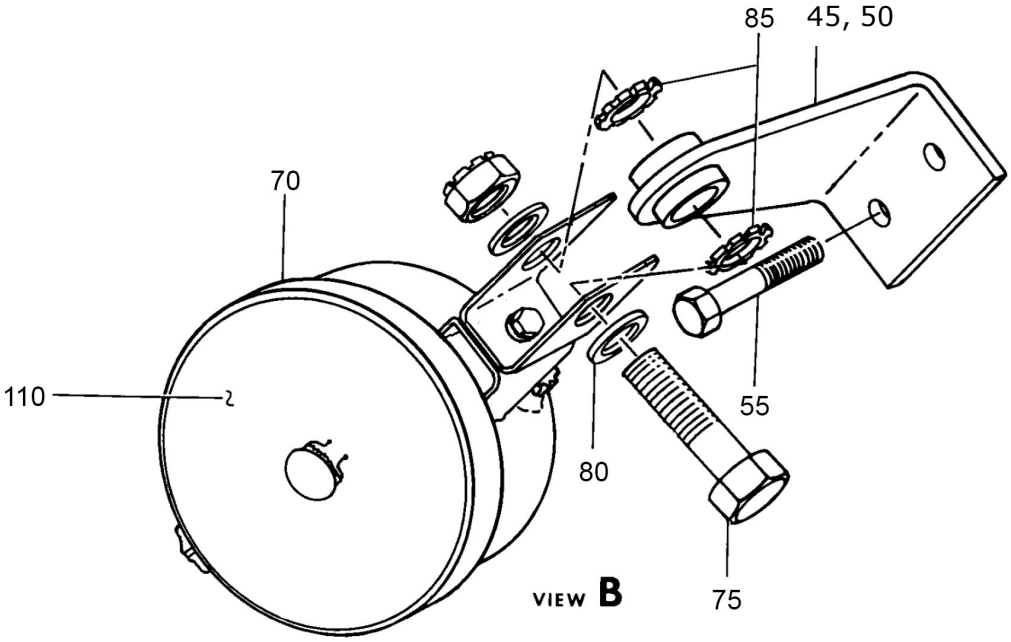

Option B

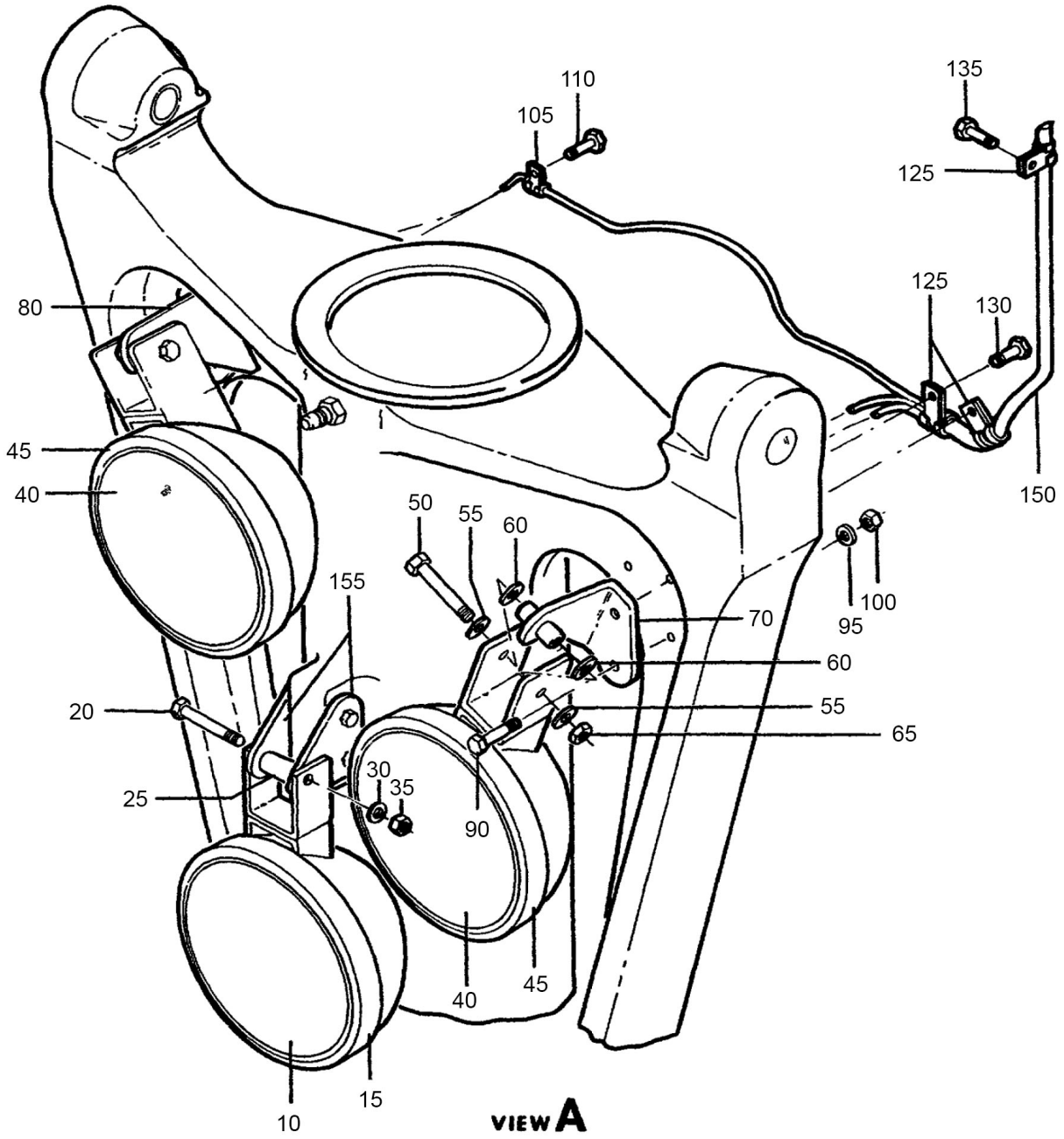
110
105
135
125
125
130
80
45
40
150
50
55
60
155
100
95
70
60
55
65
20
25
30
35
90
40
45
15
10
VIEW A

After Installation:

Kit Number: KNG-06

Option A

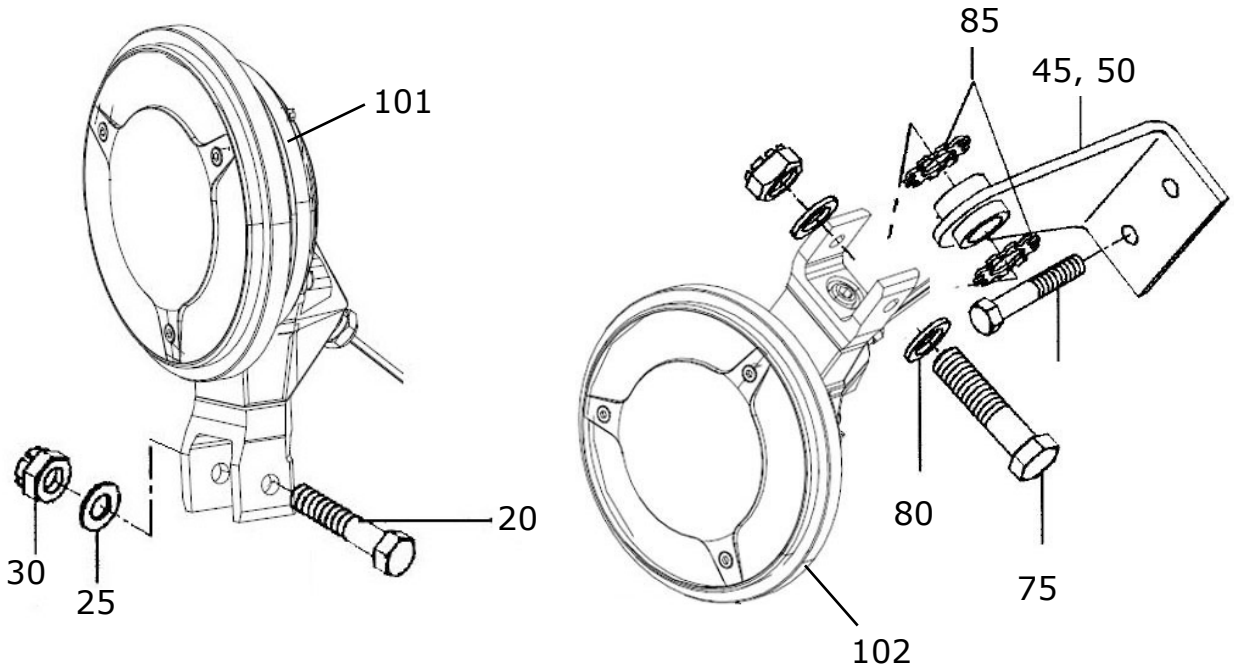

Option B

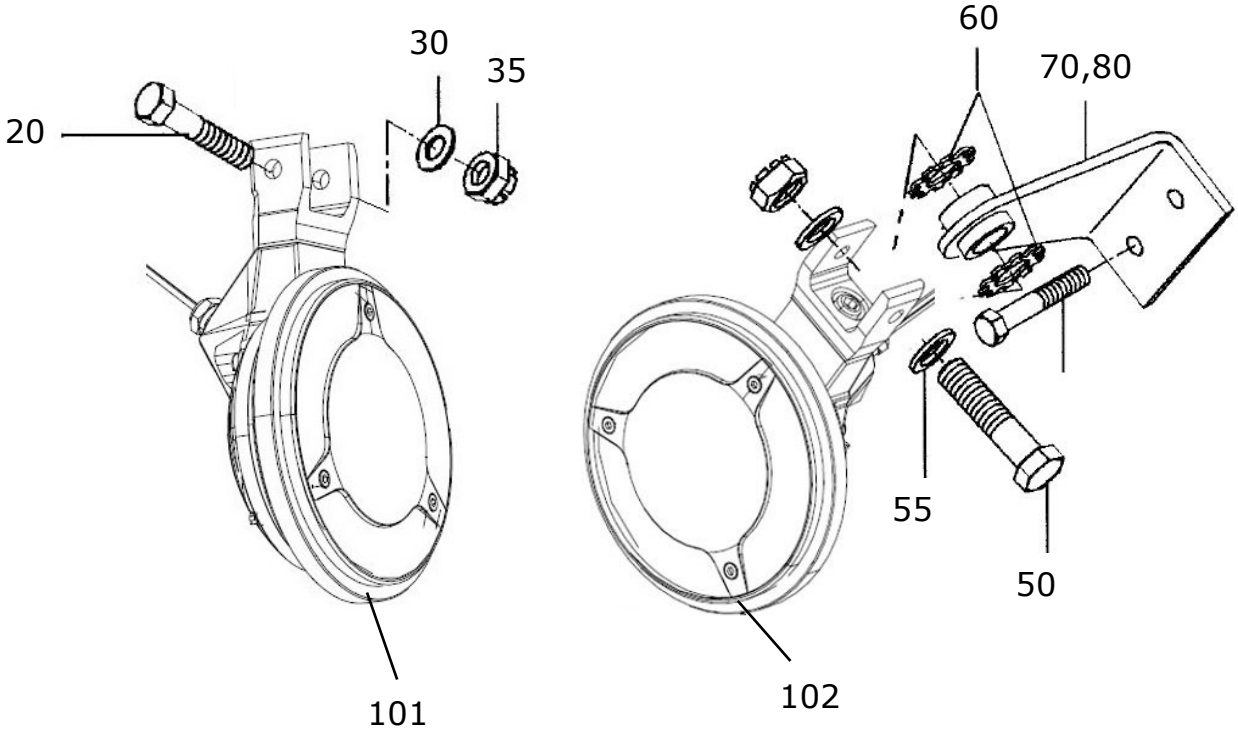

Figure and Index Number	Part Number	Description	Parts Avail.	QTY. Per assy.
101	AVE-H30-W-112	Hercules LLP Landing		2
102	AVE-H30-W-111	Hercules LLP Taxi		1
---	---	---	---	---
	ORIGINAL PARTS			
	OPTION A			
10	4587	Bulb - Taxi Light		1
15	AN3176-1	Light Assy		1
20	AN4	Bolt		1
25	AN960-416	Washer		1
30	MS20365-428	Nut		1
	MS21044N4	Nut		1
	MS21042-4	Nut		1
	130909N30	Nut		1
45	90-360010-1	Bracket Assy - LH		1
	90-360010-2	Bracket Assy - RH		1
55	130909B19	Bolt		4
70	90-360010-5	Light Assy - Landing		2
75	130909B45	Bolt		2
80	AN960-416L	Washer		2
85	AN936B416	Washer		4
110	4596	Bulb – Landing Light		2
	4594	Bulb – Landing Light		2
	OPTION B			
10	4587	Bulb - Taxi Light		1
15	90-384040-1	Housing Assy – Taxi Lamp		1
20	130909B44	Bolt		1
25	NAS43DD4-48	Spacer		1
30	AN960-416	Washer		1
35	130909N32	Nut		1
40	4596	Bulb – Landing Light		2
45	90-384040-1	Housing Assy – Landing Light		2
50	130909B46	Bolt		2
55	AN960-416L	Washer		4
60	MS35333-40	Washer		4
65	130909N32	Nut		2
70	90-360010-1	Bracket Assy – LH Landing Light		1
	90-360010-17			1
80	90-360010-2	Bracket Assy – RH Landing Light		1
	90-360010-18			1
90	130909B19	Bolt		4
95	AN960-10L	Washer		4
100	130909N29	Nut		4
105	MS21919WDG3	Clamp		1
110	130909B17	Bolt		1
115	AN960-10L	Washer		2

120	130909N29	Nut		1
125	MS21919WDG7	Clamp		3
130	130909B17	Bolt		1
135	AN3-5	Bolt		1
140	AN960-10L	Washer		3
145	130909N29	Nut		1
150	90-364241-7	Harness Light		1
155	101-820046-3	Bracket		2
	101-820046-1	Bracket		2
160	38-0240197-01	Gasket Lamp		3

NOTES

1. Remove landing light assy (item 70, 45, incl. item 110, 40) and taxi light assy (item 15, incl. item 10) in accordance to the Aircraft Maintenance Manual (AMM).
2. Disconnect the wire bundle from the landing and taxi lights.
3. Inspect the installation area for corrosion and correct according to AMM if required
4. Install landing light, item 101 and taxi light, item 102 using the original hardware as described and in accordance to the aircraft maintenance manual. Trim bracket, items 45,50,70,80, as necessary in case it is required for the adjustment of the light. Assure that corrosion protection is applied again per AMM.
5. Splice the wires of the lights into the aircraft wiring as per AMM and common practice. Regard lights polarity.

Part 2 Compliance demonstration

This document is in relation to the certification program AVE-MOD-037-PFC.
The compliance is demonstrated for the following certification specification:

Requirements	MoC	Statement of Compliance
CS 23.2250 Design and construction principles	MoC 0	***CS 23.603*** (a) All materials used are common tested materials. (b) No strength and other property data has been used for this modification. (c) The environmental conditions have been regarded for the selection of materials and the surface treatment.
CS 23.2260 Materials and processes	MoC 0	***CS 23.603*** (a) All materials used are common tested materials. (b) No strength and other property data has been used for this modification. (c) The environmental conditions have been regarded for the selection of materials and the surface treatment. ***CS 23.605*** (a) The fabrication methods for composite parts is defined in our POE. (b) Is not applicable as the fabrication method is common knowledge and the parts are not load carrying. ***CS 23.613*** (a) to (e) Is not applicable as the parts are nonstructural. The design values used are very conservative and do not require a premium selection of the material. The materials are widely common materials with better properties than the original part. No failure can have a catastrophic consequence and the material also is not fatigue critical.
CS 23.2335 Lightning protection	MoC 0	***CS 23.0867*** Specific PNs of the lights installed were not tested for lightning direct effects as per Section 23.0 of RTCA DO-160G, therefore compliance with paragraph 23.867 was not demonstrated in this project. ***CS 23.1365*** (a) The only additional wire to be installed is the synchronization wire which is only a signal wire and does not transfer power. (b) The installed equipment is thermally protected. (c)The additional wire is spliced to the light and therefore identified. (d) The wire is to be installed along the existing wiring which is an approved location. (e), (f) not applicable

Requirements	MoC	Statement of Compliance
CS 23.2500 General requirements on systems and equipment function	MoC 0	***CS 23.1301*** (a) All navigation and anti-collision lights are ETSO certified. All landing lights are qualified according to RTCA DO160 as per AVE-H30-001-CCL. (b) No changes are made which would require a changed or a new label. The equipment is labelled to be identified and with its limitation. (c) All equipment is installed within their limits. (d) The proper function is determined in a ground check as per MCS. The improved visibility had been demonstrated in document AVE-MOD-037-SR. **CS 23.1309** (a) All products have been tested to the appropriate environmental standard. In addition to that improves the new light installation the mean time between failure by a factor of about 1000. All lights are brighter at lower power consumption and a much lower temperature.
CS 23.2625 Instructions for Continued Airworthiness	MoC 0	**CS 23.1529** The modification includes a supplement to the King Air C90 Aircraft Maintenance Manual (AMM) modified by the AMM Supplement.